If the Back button of your browser is not visible, use ALT + Back Arrow to return to previous location.

Headquarters
United States Army Europe
Wiesbaden, Germany

Headquarters
United States Army Installation Management Command, Europe Region
Sembach, Germany

Headquarters
U.S. Naval Forces Europe/U.S. Naval Forces Africa/ U.S. Sixth Fleet
Naples, Italy

Headquarters
United States Air Forces in Europe/ United States Air Forces Africa
Ramstein, Germany

Army in Europe Regulation 190-1*

CNE-CNA-C6F Instruction 11240.6Y*

USAFE-AFAFRICA Instruction 31-202*

22 September 2016

Military Police

Driver and Vehicle Requirements and the Installation Traffic Code for the U.S. Forces in Germany

---

***This publication supersedes AE Regulation 190-1/CNE-C6F Instruction 11240.6X/USAFE Instruction 31-202, 13 August 2010.**

For the Commander:

MARKUS T. LAUBENTHAL
Brigadier General, GS
Chief of Staff

Official:

DWAYNE J. VIERGUTZ
Chief, Army in Europe
Document Management

Summary. This publication prescribes policy and procedures for licensing drivers of privately owned vehicles (POVs) (glossary), inspecting and registering POVs, and operating POVs and other wheeled recreational equipment on U.S. Forces installations in Germany. POV licensing and registration operations are conducted in accordance with the Supplementary Agreement (SA) to the NATO Status of Forces Agreement (SOFA). United States European Command (USEUCOM) Directive 45-7 delegates this authority to the CG, USAREUR. The traffic code in this publication is also applicable to Army elements in Italy and the Benelux. Provisions of this regulation are punitive, and violation of these provisions may subject offenders to nonjudicial or judicial action under the Uniform Code of Military Justice. Violations of these provisions may also subject individuals to adverse administrative action or adverse civilian misconduct action (AE Reg 27-9).

Summary of Change. This revision—

● Makes this regulation a punitive regulation (summary).

● Clarifies applicability to state that adverse actions against local national (LN) personnel must be coordinated with the servicing civilian personnel advisory center (CPAC) or the servicing office of the staff judge advocate, or both.

● Modifies procedures for Army military and civilian personnel and their Family members who want to obtain a motorcycle (glossary) endorsement to their U.S. Forces Certificate of License (glossary) or be issued a Motorcycle Certificate of License (para 2-2g(1)).

● Requires individuals who have previously been diagnosed or are newly diagnosed with a seizure disorder to obtain a neurologist's review and recommendation before applying or reapplying for a U.S. Forces Certificate of License (para 2-4c).

● Requires U.S. Forces who exercise custody and control over a licensee to perform a chemical test for alcohol on the breath or in the blood of the licensee if no chemical test has previously been performed or if the results will not be made available to U.S. Forces (paras 2-11e(1)(a) and (b)).

● Clarifies the administrative actions commanders may take under appropriate circumstances (paras 2-12 thru 2-15).

● Clarifies that the provisions of this regulation apply to the U.S. Forces regardless of administrative or criminal actions taken by German authorities (para 2-12i).

● Clarifies that commanders may take appropriate action against U.S. Forces licensees in alcohol-related incidents even when no chemical test was performed if the facts and circumstances warrant (para 2-12j).

● Makes additions to the applicable circumstances regarding discretionary and mandatory suspensions (glossary) and revocations (glossary) (paras 2-14a and b and 2-15).

● Authorizes petitions for reinstatement of U.S. Forces Certificates of License only after 5 years for two offenses of operating a motor vehicle (glossary) with a blood-alcohol content (BAC) of more than 0.05 percent (para 2-15b(2)(a)).

● Clarifies that a general-officer memorandum of reprimand may be issued to U.S. Forces licensees where the facts and circumstances warrant and not merely when the results of a chemical test demonstrate a particular BAC (para 2-17a).

● Modifies POV inspection and registration requirements (paras 3-4e thru g).

● Prohibits personnel from operating a POV or riding a bicycle while wearing headphones, using a cell phone (other than a hands-free device) or other devices for oral communications or text messaging, using a calculator, or taking photographs (para 5-5i and table 2-1).

● Updates the traffic-point table (table 2-1).

● Establishes AE Form 190-1AX, AE Armed Forces Traffic Ticket—Report of Action (app B).

● Incorporates administrative changes throughout.

Applicability. This publication applies to—

● Members of the U.S. Forces (Army, Navy, and Air Force) and the civilian component (including Family members) who are assigned to or employed within the geographic boundaries of Germany and who are authorized a U.S. Forces Certificate of License and POV registration privileges under AE Regulation 600-700.

NOTE: This publication applies to USAFE/AFAFRICA personnel in Germany only for licensing POV drivers and registering POVs with the USAREUR Registry of Motor Vehicles (RMV). USAFE/AFAFRICA personnel will refer to Air Force Instruction (AFI) 31-218IP for all other aspects of motor-vehicle traffic supervision, traffic violations, suspensions, revocations, and point assessments. USAFE/AFAFRICA agencies will notify the RMV of all suspensions, revocations, and traffic-point assessments.

● Persons assigned to nonappropriated fund organizations and other authorized organizations (AE Reg 600-700) in Germany, including international military headquarters.

● Members of the U.S. Forces and its civilian component on TDY in Germany who apply for a U.S. Forces Certificate of License. According to AR 190-5/Office of the Chief of Naval Operations (OPNAV) 11200.5D/AFI 31-218(I) and AFI 31-218IP, the policy and procedures in this publication apply in cases of conflict.

● U.S. military organizations with nontactical vehicles. All U.S. military organizations with nontactical vehicles designed for carrying passengers and operating on public roads will register these vehicles with U.S. Forces-provided indigenous POV license plates. Nontactical emergency and maintenance-type vehicles owned by the Interagency Fleet Management System may be registered with the U.S. Forces-provided license plates, but because of the nature of their usage, this is not required.

● Unless otherwise specified, all personnel who access U.S. installations in Germany, including LN employees of the U.S. Government, and visitors.

NOTE: Where applicable by branch of Service, personnel found in violation of this publication will be subject to suspension or revocation of their U.S. Forces Certificate of License, loss of vehicle-registration privileges, or both.

NOTE: No adverse action will be taken against LN employees or other individuals without SOFA status for violating this regulation without prior coordination with the servicing CPAC or prior legal review from the servicing legal office, or both. This restriction does not pertain to notifying German police or prosecution authorities.

Records Management. Records created as a result of processes prescribed by this publication must be—

● Identified, maintained, and disposed of by Army in Europe units according to AR 25-400-2. Record titles and descriptions are on the Army Records Information Management System website at *https://www.arims.army.mil*.

● Identified, maintained, and disposed of by CNE-CNA-C6F organizations according to Navy records-management policy.

● Maintained by USAFE/AFAFRICA units in accordance with Air Force Manual 33-363, Management of Records, and disposed of in accordance with the Air Force Records Disposition Schedule in the Air Force Records Information Management System at *https://www.my.af.mil/gcss-af61a/afrims/afrims/rims.cfm*.

If the Back button of your browser is not visible, use ALT + Back Arrow
to return to previous location.

Supplementation. Organizations will not supplement this publication without approval of the Registrar, Vehicle Registration, Office of the Provost Marshal, Office of the Chief of Staff, HQ USAREUR.

Forms. Appendix B lists forms prescribed by this publication. AE and higher level forms are available through the Army in Europe Library & Publishing System (AEPUBS) at *http://www.eur.army.mil/aepubs/*.

Suggested Improvements. The proponent of this publication is the Registrar, Vehicle Registration, Office of the Provost Marshal, Office of the Chief of Staff, HQ USAREUR (mil 496-4632). Users may send suggested improvements to this publication by e-mail to the Registrar, Vehicle Registration, at *usarmy.sembach.usareur.list.rmv-cust-svc@mail.mil*.

Distribution. This publication is available only electronically and is posted in AEPUBS at *http://www.eur.army.mil/aepubs/*.

CONTENTS

CHAPTER 1
INTRODUCTION

1-1. Purpose
1-2. References
1-3. Explanation of Abbreviations and Terms
1-4. Responsibilities

CHAPTER 2
ACQUISITION AND LOSS OF DRIVING PRIVILEGES

SECTION I
ACQUIRING A U.S. FORCES CERTIFICATE OF LICENSE

2-1. Licensing Policy
2-2. Licensing Requirements
2-3. Special Issue of U.S. Forces Certificates of License
2-4. Disabled Persons
2-5. Renewing a U.S. Forces Certificate of License
2-6. Replacing a U.S. Forces Certificate of License
2-7. Addition of Vehicle Classes
2-8. Changes to Personal Information
2-9. Eligibility for a German Drivers License
2-10. Loss of Eligibility
2-11. Implied Consent Provision

SECTION II
LOSS OF DRIVING PRIVILEGES

2-12. General
2-13. Declaration of Ineligibility for a U.S. Forces Certificate of License
2-14. Suspensions
2-15. Revocations

2-16. Revocation by Civil Authorities
2-17. Administrative Actions, Reprimands, Reports, and Disposition Procedures
2-18. Rebuttal Procedures to License Suspensions and Revocations
2-19. Appeals
2-20. Petitions for Reinstatement of Driving Privileges (Revocations and Restricted Driving Privileges)
2-21. Traffic-Point Assessment System
2-22. Reports of Actions Taken

CHAPTER 3
POV REGISTRATION

3-1. Policy and Entitlement
3-2. Limits on the Number of Registered POVs
3-3. Mechanical Standards
3-4. Inspection Requirements
3-5. Registration Requirements
3-6. Proof and Types of Ownership
3-7. 30-Day Temporary and Special Temporary Registrations
3-8. Nonoperational Registration
3-9. Transferring a POV to Another Person Eligible to Register a POV With the U.S. Forces
3-10. Transferring or Disposing of a POV to Persons Not Eligible to Register With the U.S. Forces
3-11. Renewal Registration
3-12. Requirement to Provide Proof of Continuing Insurance
3-13. Requirement to Report Changes in Registration Information
3-14. Inland Movement and Commercially Shipped POVs
3-15. Reporting Lost, Stolen, or Recovered Vehicles and License Plates
3-16. Replacing Lost, Stolen, or Mutilated License Plates, Documents, or Decals
3-17. POV Registration Certificates
3-18. Issuing and Displaying License Plates
3-19. Registration Decals
3-20. Repossession of POVs by Lienholders
3-21. Procedures for Clearing a POV
3-22. Disposition by an Agent
3-23. Withdrawal of Registration Privileges
3-24. Registration of Vehicles Used Exclusively for Racing Events and Offroad Recreational Vehicles
3-25. Loss of Eligibility
3-26. Restrictions on Displaying Written or Graphic Material on POVs

CHAPTER 4
MISCELLANEOUS PROVISIONS AND REQUIREMENTS

SECTION I
TRAFFIC LAWS AND REGULATIONS

4-1. General
4-2. Reserved POV Parking

4-3. POV Security
4-4. Safety-Equipment Requirements for Germany
4-5. Schoolbuses
4-6. Lending and Borrowing POVs
4-7. Action in Case of an Accident

SECTION II
PROVISIONS, REQUIREMENTS, AND PROHIBITIONS ON POV OPERATION AND DISPOSAL

4-8. Use of Tax-Free POL in Rented and Leased Vehicles
4-9. Prohibitions on Unregistered or Unlicensed POVs
4-10. Operation of U.S. Forces-Registered POVs by Persons Not Licensed Under This Publication
4-11. Disposing of POVs
4-12. Loss of Logistic Support
4-13. German License Plates
4-14. Exceptions to Policy

CHAPTER 5
U.S. FORCES TRAFFIC CODE FOR INSTALLATIONS IN GERMANY

SECTION I
GERMAN TRAFFIC ORDINANCE

5-1. Purpose
5-2. Responsibilities
5-3. Rules of the Road and General Provisions
5-4. Signs and Traffic Installations

SECTION II
SELECTED TRAFFIC RULES

5-5. Miscellaneous Rules
5-6. Motorcycles and Similar Vehicles
5-7. Bicycles and Skateboards
5-8. Emergency Vehicles

CHAPTER 6
MWR STRIP-LOT SAFETY REQUIREMENTS FOR THE RESALE OF POVs

6-1. Purpose
6-2. Applicability
6-3. Procedures for Resale

Appendixes
A. References
B. Prescribed Forms and Publications
C. POV Inspection Stations

D. Internal Controls, Reviews, and Audits
E. Procedures for Disposing of Unwanted POVs
F. Summary of Responsibilities of Commanders and Supervisors
G. Summary of Suspending, Revoking, and Appellate Authority Responsibilities
H. Summary of Responsibilities of Garrison Directors of Emergency Services and Chiefs, Security Forces
I. U.S. Forces Certificate of License and Motor-Vehicle Classification Summary
J. Breath- and Blood-Alcohol-Level Equivalents
K. Reporting Lost, Stolen, or Recovered POVs and License Plates

Tables

2-1. Traffic-Point Table
B-1. Prescribed Forms and Publications
C-1. Inspection Items, Methods, and Reasons for Rejection
C-2. Maximum Allowable Decibels
F-1. Commander and Supervisor Responsibilities
G-1. Suspending Authority Responsibilities
G-2. Revoking Authority Responsibilities
G-3. Appellate Authority Responsibilities
H-1. DES and CSF Responsibilities
I-1. U.S. Forces Certificate of License Requirements
J-1. Breath- and Blood-Alcohol-Level Equivalents

Figures

4-1. German License Plates Agreement Statement
C-1. Noise-Level Testing for Motor Vehicles With Three or More Wheels
C-2. Measuring Distances for Stationary Motorcycles
E-1. Format for a Notification Letter to the Owner of a Found POV

Glossary

CHAPTER 1
INTRODUCTION

1-1. PURPOSE

This publication—

a. Prescribes policy and procedures for licensing privately owned vehicle (POV) drivers and for registering POVs in Germany under the Supplementary Agreement to the NATO Status of Forces Agreement (SOFA).

b. Implements Air Force Policy Directive 31-1.

c. Prescribes rules for POVs and users of other wheeled recreational equipment on U.S. Forces installations in Germany.

d. Prescribes mechanical standards for POV inspections.

e. Explains traffic laws and regulations for POVs in Germany.

f. Explains vehicle-disposal procedures and strip-lot safety requirements.

1-2. REFERENCES

a. Appendix A lists references.

b. Appendix B lists publications and forms prescribed by this publication.

1-3. EXPLANATION OF ABBREVIATIONS AND TERMS
The glossary defines abbreviations and terms.

1-4. RESPONSIBILITIES

a. Safety Division, Office of the Chief of Staff, HQ USAREUR (USAREUR Safety Division). The USAREUR Safety Division will work with the IMCOM-Europe Safety Office and the 405th Army Field Support Brigade (405th AFSB) Safety Office to—

(1) Advise the USAREUR Provost Marshal (PM) on safety-related issues affecting the driving instructor certification program, driver training and testing program, community drivers' orientation course, and the Motorcycle Safety Foundation (MSF) community motorcycle riders training program.

(2) Make recommendations to improve or modify driver-training programs based on changes in European traffic laws, vehicle safety requirements, and analyses of accident reports.

(3) Develop safety policy that applies to vehicle operations in the European theater and have the policy published in Army in Europe publications.

(4) Evaluate driver-training programs in the European theater for effectiveness and adequacy in preventing accidents.

b. USAREUR PM. The USAREUR PM, through the U.S. Forces Registrar, will—

(1) Establish policy and procedures for issuing U.S. Forces Certificates of License, registering POVs, and disposing of POVs. The USAFE/AFAFRICA Director of Security Forces (HQ USAFE/A4S) oversees POV registration offices, and the USAFE/AFAFRICA Director of Logistics, Engineering, and Force Protection (HQ USAFE/A4) oversees POV driver testing facilities and inspection stations operated by USAFE/AFAFRICA units. USAFE/AFAFRICA has its own policy for disposing of POVs and procedures for meeting motorcycle orientation and proficiency course requirements.

(2) Develop procedures for preventing the operation of unregistered, improperly registered, and uninsured POVs.

(3) Develop procedures for POV driver training and testing.

(4) Operate a central registry to—

(a) Issue U.S. Forces Certificates of License and POV registrations.

(b) Maintain information-storage facilities to identify people allegedly involved in crimes and offenses associated with the operation of motor vehicles.

(5) Maintain central records of the items in (4)(a) and (b) above at the USAREUR Registry of Motor Vehicles (RMV).

(6) Evaluate requests for opening community field registration stations (FRSs) and driver testing stations (DTSs), inspect stations periodically, and certify their continued operation or initiate other appropriate actions.

(7) Take administrative actions to assess points and suspend, revoke, or declare a person ineligible for a U.S. Forces Certificate of License (chap 2, sec II) when he or she commits any of the following:

(a) A traffic offense reported by German authorities.

(b) An action reported by military police (MP), security forces (SF), or the United States Army Criminal Investigation Command that is not acted on within 60 calendar days after receipt by the suspending or revoking authority (para 2-22b) and the suspending authority (glossary) fails to respond within 60 calendar days or takes no action on DA Form 4833 with no explanation or finding of innocence (para 2-22c).

(8) Notify German and U.S. law-enforcement officials of adverse actions taken against an individual's driving or registration privileges, and notify individuals through their chain of command or supervision by certified mail of all mandatory suspensions or revocations.

(9) Charge the appropriate fees for RMV services (for example, requests for translation letters, history research, applications for registration and certificates of license, renewals).

NOTE: Checks from foreign banks payable in dollars will not be accepted for any RMV transaction.

(10) Enforce customs requirements addressed in this publication.

(11) Determine monthly fuel-ration authorizations based on provisions of the Forces Customs Law (*Truppenzollgesetz*) and data presented by the owner at the time of registration.

c. Deputy Chief of Staff, Engineer, USAREUR (USAREUR DCSENGR). The USAREUR DCSENGR will—

(1) Provide advice and policy guidance to IMCOM-Europe regarding facilities and engineering support to ensure that the intent of this publication is met.

(2) Provide advice and policy guidance regarding installation traffic layout.

(3) Be the approval authority for installation traffic layouts based on civil-engineering requirements and standards.

(4) Be responsible for resolving traffic-congestion and traffic-flow issues when needed.

d. 405th AFSB.

(1) The 405th AFSB Support Operations will—

(a) Establish, staff, and operate community POV inspection stations and DTSs.

(b) In coordination with the USAFE/AFAFRICA Transportation Division (HQ USAFE/A4RT), inspect POV inspection stations and DTSs to ensure they are managed and operated properly.

(c) Follow RMV-issued procedural guidelines for operating DTSs and safety-inspection stations. The RMV will provide these guidelines directly to DTSs and safety-inspection stations.

(d) Ensure internal controls for DTSs and POV inspection stations are maintained in accordance with appendix D.

(2) The Base Support Operations Maintenance Division (BMD) will—

(a) In coordination with HQ USAFE/A4RT, establish criteria for operating POV inspection stations and enforcing POV mechanical and safety-inspection standards (app C).

(b) Provide safety-inspection stamps (app C, para C-4) for approved stations.

(c) In coordination with HQ USAFE/A4RT, enforce the requirements and procedures in appendix C regarding—

1. The standards required of POV inspection stations.

2. Situations that may occur at POV inspection stations during safety inspections that are not specifically addressed in this publication.

(d) Provide overall staff supervision of POV inspection stations established and operated by both the Army and the Air Force.

e. United States Army Garrison (USAG) Commanders and USAFE/AFAFRICA Mission Support Group (MSG) and Logistics Support Group (LSG) Commanders (Ramstein and Spangdahlem).

(1) On approval from appropriate authorities, USAG commanders will establish, staff, and operate community FRSs, and MSG and LSG commanders will operate Air Force FRSs and DTSs. Local FRSs will be under the supervision of the director of emergency services (DES) and the USAFE/AFAFRICA chief, security forces (CSF).

(2) USAFE/AFAFRICA MSG and LSG commanders will establish, staff, and operate AF POV inspection stations on approval from appropriate authorities. POV inspection stations will be under the supervision of HQ USAFE/A4RT.

(3) USAG commanders and USAFE/AFAFRICA MSG and LSG commanders will—

(a) Ensure internal controls for FRSs and USAFE/AFAFRICA DTSs are maintained in accordance with appendix D.

(b) Issue instructions for disposing of abandoned POVs in accordance with appendix E.

(c) Ensure annual installation traffic-design walkthroughs are conducted and deficiencies are corrected. Commanders may make temporary changes to the installation traffic plan only for emergency or short-term needs. "Short-term needs" include construction projects, parades, and similar unit or community events or projects.

(d) Follow RMV-issued procedural guidelines for operating FRSs and USAFE/AFAFRICA DTSs. The RMV will provide these guidelines directly to FRSs and USAFE/AFAFRICA DTSs.

f. Commanders and Supervisors. Commanders and supervisors (glossary) will—

(1) Ensure their personnel properly insure, register, and operate POVs and have valid U.S. Forces Certificates of License for the types of vehicles they register or operate (app F).

(2) Ensure that military personnel who purchase a different type of motorcycle (for example, increasing engine size, changing from sport to cruiser or vice versa) attend the appropriate MSF training for all motorcycles registered before riding on public roads. This may require some personnel to attend more than one MSF training course before riding.

(3) At the request of the appropriate local legal liaison authority (LLA), effect service of process by presenting the ticket to the individual concerned, and return the completed and signed certificate of service as directed by the LLA.

(4) In order to facilitate service of German traffic tickets, provide a main and alternate POC for electronic service of process to the Wiesbaden Legal Center at *usarmy.wiesbaden.usareur.list.oja-wlc-traffic-ticket-pocs@mail.mil* and provide updates as requested. The Wiesbaden Legal Center will maintain and regularly update the list and make it available to the other local LLAs.

(5) At the request of the appropriate local LLA or the USAREUR Registrar of Motor Vehicles, assess traffic points and suspend or revoke driving privileges (glossary) for at least the time indicated on the traffic ticket or forward the request to the appropriate suspending or revoking authority for action.

(6) Ensure that members of their command properly dispose of their POVs in accordance with appendix E.

g. Local DESs, CSFs, MP, and SF. Local DESs, CSFs, MP, and SF will—

(1) Spot check POVs and POV drivers in U.S.-controlled areas for compliance with this publication.

(2) Cite violators.

(3) Confiscate license plates when required (app H).

(4) Prohibit registration of any additional vehicles until all vehicles registered to an individual have been brought into compliance with this publication.

h. Suspending, Revoking, and Appellate Authorities. Suspending, revoking, and appellate authorities will take the actions listed in appendix G.

i. Persons Subject to This Publication. Persons subject to this publication will—

(1) Comply with the requirements in this publication. Failure to wear required personal protective equipment (PPE) and failure to comply with licensing, operation, or training requirements may be considered when making line-of-duty determinations if an injury occurs because of non-use of PPE or noncompliance with the requirements in this publication.

(2) Present, on request of an MP or SF officer, unit commander, or German or U.S. law-enforcement official or security gate guard, a U.S. Forces ID card, U.S. Forces Certificate of License, POV registration, and, for military motorcycle operators, a valid MSF training card.

CHAPTER 2
ACQUISITION AND LOSS OF DRIVING PRIVILEGES

SECTION I
ACQUIRING A U.S. FORCES CERTIFICATE OF LICENSE

2-1. LICENSING POLICY

a. Military and civilian personnel and their Family members must have a U.S. Forces Certificate of License to drive in Germany. This does not include the operation of Government vehicles; those can be operated using Optional Form (OF) 346 or AF Form 2293. To get a U.S. Forces Certificate of License, military and civilian personnel and their Family members must have a valid country license (glossary). OF 346 and AF Form 2293 may not be used in place of a valid country license to obtain a U.S. Forces Certificate of License. The minimum age to apply for a class 3 U.S. Forces Certificate of License with a valid country license is 17 (table I-1). Personnel who receive a U.S. Forces Certificate of License and who are 17 years old may drive only within the borders of the Federal Republic of Germany until their 18th birthday. Individuals may operate only the class or classes of POVs indicated on their U.S. Forces Certificate of License. Appendix I, paragraph I-2, lists vehicle classifications.

b. USAG commanders and USAFE/AFAFRICA MSG and LSG commanders may, on a case-by-case basis, grant an exception to subparagraph a above for new arrivals without a U.S. Forces Certificate of License to drive only the class of vehicles indicated on their stateside drivers license only in Germany for up to 30 calendar days when both of the following requirements are met:

(1) The new arrival previously had a U.S. Forces Certificate of License or, based on his or her position or age, is considered to be mature and responsible.

(2) The new arrival has a valid U.S. drivers license and either an international drivers license or an official German translation (for example, from the *Allgemeiner Deutscher Automobil-Club* (*ADAC*)) of the U.S. license.

c. Individuals who have lost their driving privileges for any reason will not be granted the authorization in subparagraph b above. These individuals will be prohibited from operating a motor vehicle under any circumstances until their driving privileges have been restored. This includes individuals who, during the 30-day exception period, take the drivers examination and fail the test. Failing the drivers test will void the commander's exception to policy. These individuals will also be prohibited from driving until they have passed the required examination.

d. When granted, the written authorization to drive without a U.S. Forces Certificate of License must specify—

(1) How long the individual is authorized to drive without a U.S. Forces Certificate of License (not to exceed 30 calendar days).

(2) That the authorization applies to German-plated or Army and Air Force Exchange Service (AAFES) rental vehicles and to POVs that have been properly registered and insured.

(3) That the authorization applies only to the class or classes of vehicles indicated on the individual's U.S. drivers license. This authorization, however, will not be granted for motorcycles.

(4) That individuals must present the authorization to their local DTS so that a Temporary U.S. Forces Certificate of License (AE Form 190-1G) may be issued for up to 30 calendar days. Individuals must return to the local DTS within the 30-day period to complete testing for a permanent U.S. Forces Certificate of License.

e. USAG commanders and USAFE/AFAFRICA MSG and LSG commanders may delegate the authority to grant an exception to policy (b above) to headquarters commandants of combatant commands and unified commands.

f. The RMV is the only authority authorized to approve and issue drivers license history records to U.S. Forces members, civilians, contractors, and Family members. These individuals may obtain a drivers license history record by sending the following to the RMV:

(1) U.S. Forces Certificate of License number.

(2) Administrative fee (by check, money order, or credit card) (nonrefundable).

(3) Mailing address.

NOTE: Requests are processed individually by U.S. Forces Certificate of License number.

2-2. LICENSING REQUIREMENTS

a. U.S. Forces Certificates of License are valid for 5 years. To obtain a class 2 or class 3 U.S. Forces Certificate of License, a person must—

(1) Complete AE Form 190-1T.

(2) Present an approved AE Form 190-1T, a U.S. Forces ID card, and one of the following to the local community DTS clerk for the class of vehicle for which applying (app I, para I-2):

(a) A class 2 or 3 license issued by civil authorities of a country or by any State or territory of the United States (country license).

(b) A *Begleitetes Fahren ab 17 (B17)* driving authorization (glossary) issued by a *Fahrschule* ((4)(a)1 and d below).

(c) A POV license issued by another U.S. Forces command in Europe.

(3) Attend a drivers orientation. The orientation will consist of a 2-hour briefing. USAFE/AFAFRICA military and civilian personnel and their Family members only need to complete Course II, Local Conditions (AFI 91-207). Persons who have a German drivers license are not required to attend the drivers orientation.

(4) Pass the following tests:

(a) Written Test or Joint Knowledge Online (JKO) Driver Training Program Test (Common Access Cardholders only). Individuals are required to complete the testing process using only one of the available testing options. Mixing of the testing options is not permitted. Persons who begin testing at local community DTS locations must complete the requirements there and may not switch to the online testing option. AE Pamphlet 190-34/USAFE Pamphlet 31-206 is the drivers handbook to use when studying for this test. The pamphlet includes a sample written test and all international road signs. Applicants will write their test answers on AE Form 190-1X. The written test for POVs will be waived if either of the following applies:

1. The applicant has a valid class B or C German drivers license or a *B17* driving authorization, or is a member of a non-U.S. military force assigned to NATO with a valid country license. The test waiver does not apply to a suspended or revoked U.S. Forces Certificate of License.

2. The applicant has a valid class B or C license issued by the European Union (EU) or another command belonging to the U.S. Forces in Europe. In this case, applicants must submit AE Form 190-1T to the local community DTS within 30 calendar days after arriving in Germany and present their drivers license certificate.

(b) Eye Test. DTSs will administer eye tests to applicants younger than 65. Applicants who are 65 years and older must have their eyes examined by an optometrist or an eye-vision professional to obtain or renew a U.S. Forces Certificate of License. Proof of eye-test results will not be accepted if the document is over 60 calendar days old.

(5) Pay the prescribed licensing fee by check, money order, or credit card.

b. Applicants who fail the test twice will be ineligible for retesting for 2 weeks. If an applicant fails the test a third time, the applicant will be declared ineligible for retesting for 60 calendar days and must complete POV driver orientation training before retesting. (In cases of exceptional hardship, the 60-day waiting period may be waived. Normally, a waiver will be granted only if recommended by the commander or supervisor and approved by the officer responsible for operating the DTS.)

c. Applicants for a class 3 vehicle certificate of license will automatically receive a class 4 and 5 license to operate two-wheeled vehicles of 50 cubic centimeters and below that can travel less than 50 kilometers per hour. If an individual previously received a class 3 license, he or she may apply for an amendment to add class 4 or class 5 free of charge, but the expiration date of the amended license must remain the same as on the original license. Individuals who do not qualify for a class 3 vehicle license (those who are younger than 17 years old) may apply for a class 4 or class 5 if they have a valid country or State license with that class.

d. When a U.S. Forces Certificate of License is issued based on a *B17* driving authorization (paras a(2)(b) and a(4)(a)1 above), the Certificate of License will include all restrictions that apply to the *B17* driving authorization. The *B17* driving authorization must list all individuals authorized to accompany the holder of the *B17* driving authorization. The authorized individuals must be at least 30 years old, have had a drivers license for at least 5 years, and not have received more than three points under the German drivers license system.

e. The permanent U.S. Forces Certificate of License will be mailed to the applicant.

f. Licenses are not valid until signed in ink by the licensee.

g. Additional requirements for applying for motorcycle licenses are as follows:

(1) Army Requirements.

(a) To be eligible for a motorcycle endorsement to their U.S. Forces Certificate of License or be issued a U.S. Forces Motorcycle Certificate of License, Army military and civilian personnel, contractors, and Family members must have a motorcycle license or a motorcycle endorsement to their drivers license issued by civil authorities of a country or by a U.S. State or territory of the United States. In addition, U.S. military personnel are required to possess a valid MSF card (not older than 5 years) issued by the U.S. Forces or the provider of a state-approved course. (The term “state-approved” means any course for which a state or HN waives the riding-skills portion of the motorcycle license or endorsement test by a state or HN certificate. Civilian personnel, contractors, and Family members are not required to possess an MSF card in order to receive a USAREUR motorcycle license and are not authorized to take MSF training, including training on standby at USAG facilities. They are, however, highly encouraged to attend a motorcycle safety course in CONUS before traveling to Germany. MSF courses are also offered (at the expense of the applicant) by German driving schools (*Fahrschulen*).

(b) In addition to having a motorcycle license or endorsement issued by civil authorities, U.S. Forces military and civilian personnel, Family members, and contractors must—

1. Attend a 4-hour approved Army in Europe motorcycle orientation course.

2. Pass a 30-question written motorcycle test. Applicants who fail the test twice will be ineligible for retesting for 2 weeks. If an applicant fails the test a third time, the applicant will be declared ineligible for retesting for 60 calendar days and must attend the motorcycle orientation course before retesting. In cases of exceptional hardship, the 60-day waiting period may be waived. Normally, however, a waiver will be granted only if recommended by the commander or supervisor and approved by the officer responsible for operating the DTS.

(c) Once the requirements in (b)1 and 2 above have been met, civilian personnel, contractors, and Family members may proceed to their local vehicle registration station with their paperwork to obtain a motorcycle endorsement to their U.S. Forces Certificate of License or be issued a U.S. Forces Motorcycle Certificate of License.

(d) Military applicants—

1. Must have at least a valid MSF card for the Basic Rider Course (BRC) and schedule the MSF Experienced Rider Course (ERC) or Motorcycle Sport Rider Course (MSRC) (depending on the type of motorcycle they own) within 12 months. Military applicants who do not have a current MSF card, but have a current state or country motorcycle license or endorsement to their drivers license, will receive an 8-day temporary motorcycle license, which will be issued 3 duty days before the beginning of the MSF course.

2. Will obtain third-party insurance for their motorcycle, obtain an 8-day temporary registration, and pass the vehicle safety inspection before the MSF course. Applicants must obtain a permanent Certificate of License and permanent registration for their motorcycle before their temporary license and registration expire.

3. Who are not using their own motorcycle during the MSF course must ensure that the motorcycle they are using is of the same type, weight, and engine capacity (measured in cubic centimeters (cc)) as the motorcycle they will be riding, that it meets all safety and registration requirements, and that they have valid insurance for the vehicle before operating it on the 1st day of the course.

4. Who do not successfully complete the MSF course must register their motorcycles as nonoperational before their temporary registration expires.

5. Who have a motorcycle license or a motorcycle endorsement to their drivers license may attend the BRC; however, within 12 months after completing the BRC, they must complete the MSF ERC or MSRC.

6. Will provide DTS personnel a copy of their valid MSF training card on completion of training.

7. Will complete an MSF course every 5 years to operate and register a motorcycle.

NOTE: Military personnel who do not have a valid country or U.S. State or territory of the United States drivers license for a motorcycle are prohibited from attending an MSF course sponsored by the U.S. Army in Germany. MSF motorcycle training is not authorized for individuals to operate a motorcycle with an attached sidecar or a three-wheeled vehicle (trike (glossary), Can-Am Spyder) until a modified MSF course, approved by Department of the Army (DA) Safety or IMCOM Safety, is available. Personnel who operate privately owned all-terrain vehicles (ATVs) or motorcycles offroad should complete appropriate operator safety-training courses. Military personnel who operate three-wheeled vehicles may, however, complete the MSF BRC using a trainer motorcycle.

(e) The BRC is offered as a testing requirement at no extra cost to military applicants. The course includes about 16 hours of classroom and hands-on training and evaluation.

(f) The ERC and the MSRC are offered at no cost by all USAGs to military personnel who have a valid stateside motorcycle license or endorsement to their drivers license and have completed the BRC. The ERC and the MSRC are intended for experienced riders and include hands-on training and evaluation.

(g) Motorcycle refresher training (MRT) is mandatory for Soldiers returning from deployments (glossary) of more than 180 calendar days. Soldiers must complete MRT before operating motorcycles on public or private roads or highways with the exception of riding to the safety-inspection station and training site or location. Soldiers will use their own motorcycle during MRT to confirm their ability to safely handle their motorcycle. They will not take training on a training motorcycle of a smaller size or with less engine capacity (cc). When commanders question a motorcycle rider's safe riding skills based on the rider's MRT performance, they may refer the motorcycle rider to Army Traffic Safety Training Program motorcycle courses for retraining.

(h) Within 5 years after completing the ERC, the Basic Rider Course II (BRC-II), the MSRC, or the Advanced Rider Course (ARC), Soldiers will complete motorcycle sustainment training in accordance with AR 385-10, chapter 11, paragraph 11-7a(6). Soldiers will also complete sustainment training when they acquire a new or different type of motorcycle after a 5-year period of inactivity and are encouraged to take sustainment training after a major geographical change. Commanders are not authorized to waive or defer sustainment training.

(i) Soldiers who change to a different type of motorcycle or a motorcycle with a larger engine capacity (cc) (for example, from a cruiser bike to a sport bike, from 250 cc to 500 cc) must retake either the ERC or the MSRC course, depending on the motorcycle.

(j) Army military and civilian personnel, contractors, and Family members who do not have a valid country license for a motorcycle (including a U.S. State- or territory-issued motorcycle drivers license or a U.S. State or territory drivers license with a motorcycle endorsement) must do either of the following:

1. Complete motorcycle training at a German driving school (*Fahrschule*) and obtain a German motorcycle drivers license. (Applicants must pay for this training.)

2. Obtain either a drivers license for a motorcycle or a motorcycle endorsement to their POV drivers license issued by a U.S. State or territory.

(k) After completing all requirements, all applicants will be issued a temporary (60-day) motorcycle license (AE Form 190-1G) to allow for application processing.

(l) After issuing AE Form 190-1G, the DTS will send AE Form 190-1T and the fee to the RMV for processing.

NOTE: Individuals who apply for a motorcycle license must also complete the requirements in subparagraphs a(3) and (4) above for obtaining a POV drivers license.

(2) Air Force and Navy Requirements.

(a) Air Force and Navy military personnel who have a valid country license or a U.S. State-issued motorcycle license or endorsement to their drivers license will be issued a temporary U.S. Forces Certificate of License (AE Form 190-1G) 3 duty days before any training. The temporary license will be valid for 8 calendar days and will allow the applicant to complete the appropriate motorcycle safety courses, as determined by the individual's unit motorcycle coordinator (UMC).

1. The MSF BRC provides approximately 16 hours of classroom and hands-on training to improve the skills of less experienced riders.

2. The MSF ERC is intended for more experienced riders and is offered as recurring training. This 1-day course provides hands-on refresher training and evaluates rider ability.

3. Air Force and Navy military members must attend an ERC or MSRC within 1 year after completing the BRC.

4. An MSF card will be issued on completion of either course.

NOTE: An MSF course must be completed every 5 years to operate and register a motorcycle.

(b) USAFE/AFAFRICA civilian personnel and eligible Family members are not required to have an MSF training card, but they are highly encouraged to participate in MSF training (BRC or ERC every 5 years) on a space-available basis at USAFE/AFAFRICA training facilities.

(c) Navy civilian personnel and Family members are not required to have an MSF training card to obtain a motorcycle license endorsement to their U.S. Forces Certificate of License.

NOTE: Individuals who apply for only a motorcycle license must also complete the requirements in subparagraphs a(3) and (4) above for obtaining a POV drivers license.

(3) Prohibition to Attend MSF Courses.

(a) Individuals who do not have a valid country or U.S. State motorcycle endorsement to their drivers license may not attend MSF courses sponsored by the U.S. Army in Germany.

(b) MSF training is not authorized for individuals who operate a motorcycle with an attached sidecar or a three-wheeled vehicle (trike). Military personnel who operate three-wheeled vehicles may, however, complete the MSF BRC using a trainer motorcycle.

(c) As an exception, under certain conditions and when approved by the installation commander, USAFE/AFAFRICA personnel without a valid motorcycle endorsement to their country or U.S. State drivers license may be allowed to complete the MSF BRC course at USAFE/AFAFRICA-controlled training facilities. This controlled training will not be conducted on public roads (closed course only). Commanders will confer with their legal and safety personnel to assess the risk and liability associated with offering this training. Individuals must arrange for the legal transport of their motorcycle to and from the course and accept liability for any damages and injuries to themselves, other private citizens, or the U.S. Government. Local procedures will be formally established to administer this special training.

2-3. SPECIAL ISSUE OF U.S. FORCES CERTIFICATES OF LICENSE

a. Members of the U.S. Forces and the civilian component who are on TDY in Germany and have a valid country license may take the drivers test to obtain a U.S. Forces Certificate of License to operate a U.S. Forces-registered POV.

b. Personnel whose driving privileges have been suspended or revoked may request restricted driving privileges in accordance with paragraph 2-20d.

c. Personnel whose driving privileges have been revoked but who need to move a POV in connection with a permanent change of station (PCS) may apply through the revoking authority for a 5-day temporary U.S. Forces Certificate of License. To move a POV, individuals must obtain third-party insurance, register the POV, and obtain license plates in accordance with this regulation.

2-4. DISABLED PERSONS

a. A person with physical disabilities who is applying for a U.S. Forces Certificate of License must present a written statement from a physician that the disabilities are not likely to interfere with the person's ability to operate motor vehicles safely.

b. If an individual with a U.S. Forces Certificate of License becomes disabled or suffers from a condition that will interfere with his or her ability to operate a motor vehicle safely (for example, a broken bone in a cast, vision problems, when recovering from an operation), the individual's physician or the servicing medical facility will notify the appropriate licensing authority (the RMV for the U.S. Forces) and the individual's command. Individuals with disabilities who drive must carry a statement from a physician stating that the disability is not likely to interfere with the individual's ability to drive safely.

c. Individuals applying for a U.S. Forces Certificate of License who have previously been diagnosed or are newly diagnosed with a seizure disorder must obtain a neurologist's review and recommendation before applying or reapplying for a U.S. Forces Certificate of License.

d. Applicants who are incapable of taking the written test because of a physical or mental infirmity are automatically ineligible for a U.S. Forces Certificate of License. Applicants with English-language problems or physician-cleared conditions will be allowed to take the examination orally.

2-5. RENEWING A U.S. FORCES CERTIFICATE OF LICENSE

a. Applicants may apply for a license renewal up to 60 calendar days before the license expires. This 60-day period applies to all vehicle classes.

b. Applicants for renewal must complete AE Form 190-1T and an eye test (para 2-2a(4)(b)) and pay the required license fees.

c. Applicants may submit AE Form 190-1T to renew an expired U.S. Forces Certificate of License up to 1 year after the license has expired without having to take the written test; after 1 year, applicants will be required to take the written test. U.S. Forces personnel who have a U.S. Forces Certificate of License and live in the United States may apply for license renewal by writing to the USAREUR RMV (Operator License Section), Unit 29230, APO AE 09136-9230. The 1-year grace period applies only to license renewal; it is not an authorization to drive with an expired Certificate of License. Individuals must have a valid country or U.S. State drivers license in order to renew an expired U.S. Forces Certificate of License.

d. Military personnel with a motorcycle class on their current U.S. Forces Certificate of License must provide proof of having attended a valid MSF course within the last 5 years to keep the motorcycle class on their U.S. Forces Certificate of License when the license is renewed.

2-6. REPLACING A U.S. FORCES CERTIFICATE OF LICENSE

a. If a U.S. Forces Certificate of License is lost or destroyed, or if it becomes mutilated and is more than 3 years old, the licensee must complete the requirements in paragraphs 2-2a(1) and (2) (except the requirement for a valid country license), take an eye test (para 2-2a(4)(b)), and pay the prescribed licensing fee to request a replacement license. If a license becomes mutilated within 3 years after the date of issue, the licensee may do either of the following:

(1) Apply for a replacement license at no cost and without taking an eye test. In this case, the licensee will receive a replacement license with the same expiration date as that of the original license.

(2) Apply for a replacement license, pay the replacement fee, and take an eye test. In this case, the licensee will receive a replacement license that is valid for 5 years.

b. Personnel returning from deployments whose U.S. Forces Certificate of License is mutilated, lost, or stolen may obtain a replacement license with the original expiration date at no cost, or they may take an eye test, pay the license fee, and receive a license valid for 5 years.

2-7. ADDITION OF VEHICLE CLASSES

Additions of vehicle classes to a U.S. Forces Certificate of License may be made only if the individual has a valid country license indicating the class to be added (and paid the license fee). Licensees applying for an addition of a vehicle class to their existing U.S. Forces Certificate of License will—

a. Complete the requirements in paragraphs 2-2a(1), (2), and (4)(b).

b. Turn in their existing U.S. Forces Certificate of License.

2-8. CHANGES TO PERSONAL INFORMATION

Licensees will report changes to personal information (for example, name, unit address) to obtain a new U.S. Forces Certificate of License. Licensees must turn in their existing license and complete the requirements in paragraphs 2-2a(1) and (2). Individuals must pay the current licensing fees when changing names on their drivers license.

2-9. ELIGIBILITY FOR A GERMAN DRIVERS LICENSE

a. The RMV is the only authority designated to issue authorization letters and license history records to U.S. Forces military personnel, civilians, contractors, and Family members for requesting a German drivers license. Requests for authorization letters are processed individually per U.S. Forces Certificate of License number. Authorizations letters are not issued for class 2 and class 6 licenses (that is, bus and truck (glossary) licenses).

b. To obtain an authorization letter, U.S. Forces military personnel, civilians, contractors, and Family members must send the following to the RMV:

(1) The U.S. Forces Certificate of License number.

(2) The administrative fee (by check, money order, or credit card). Payment of this fee is required; the fee is not refundable.

(3) The requester's mailing address.

NOTE: Requirements for German drivers licenses vary by location of the German license-issuing authority. Applicants should therefore check with the local office to ensure its requirements can be met before applying for an authorization letter.

c. In addition to the items in b(1) through (3) above, Family members who register POVs with German authorities (for example, because they are operating a commercial business) and who are required to have a German drivers license must provide the RMV a copy of the German vehicle registration.

d. U.S. Forces military personnel, civilians, contractors, and Family members who do not have a valid country license may enroll in a *Fahrschule* at their own expense and obtain a German drivers license on completion. Individuals may require a license history record and an authorization letter to sign up with the *Fahrschule*. These documents can be obtained from the RMV (a above). Since requesters must pay a nonrefundable service fee for having these documents issued, they should ensure the *Fahrschule* they selected accepts the documents before requesting them from the RMV.

2-10. LOSS OF ELIGIBILITY

a. Individuals who retire, are discharged or terminated from military or civilian service, or are barred theater-wide lose their eligibility for a U.S. Forces Certificate of License at 0001 hours on the day after the retirement, discharge, termination, or the imposition of the theater-wide bar (AE Reg 550-175/ CNE-CNA-C6F Instruction 5840.1F/USAFE Instruction 51-702 and AE Reg 600-700).

b. Family members lose eligibility on termination of their sponsor's eligibility, on expiration of a 90-day grace period, or by divorce or loss of dependent status (AE Reg 550-175/CNE-CNA-C6F Inst 5840.1F/USAFE Inst 51-702 and AE Reg 600-700).

c. Individuals in subparagraphs a and b above (except those under a theater-wide bar and those who have been discharged under less than honorable conditions) may apply for an authorization letter to request a German drivers license (except for classes 2 and 6) (para 2-9) by sending the following to the RMV 90 calendar days before the loss of eligibility date:

(1) A copy of the separation orders or other official document confirming the last day of logistic support.

(2) The U.S. Forces Certificate of License number.

(3) The administrative fee (by check, money order, or credit card). Payment of this fee is required; the fee is not refundable.

(4) The requester's mailing address.

d. Family members who remain in Germany after the rotation or death of the sponsor (glossary) retain driving privileges for 90 calendar days (AE Reg 550-175/CNE-CNA-C6F Inst 5840.1F/USAFE Inst 51-702 and AE Reg 600-700). These Family members may apply for a German drivers license during this period by completing the requirements in subparagraph c above.

e. When a person again becomes eligible to have a U.S. Forces Certificate of License (for example, on PCS to Germany) and has a U.S. Forces Certificate of License that has not yet expired, the license will be reactivated for as long as it is still valid. A change of address must be completed as soon as a new address is established.

2-11. IMPLIED CONSENT PROVISION

a. Persons who have a U.S. Forces Certificate of License or who operate a POV are understood to have given their consent to chemical tests for alcohol or other drugs on their breath or in their blood or urine if lawfully stopped, apprehended, or cited for any offense allegedly committed while operating or otherwise being in physical control of a motor vehicle. A chemical test, administered by either U.S. Forces or German civil authorities, is sufficient evidence for action under this publication. Licensees cannot determine which chemical test will be given.

b. Licensees who refuse to submit to chemical testing will be informed that failure to submit to or complete tests administered by U.S. Forces or German civil authorities will result in revocation of their U.S. Forces Certificate of License in accordance with paragraph 2-15.

c. Administration of chemical tests may be delayed after a POV accident or offense. When administered, the results of the test will be considered valid under this publication despite the delay. For example, if someone drinks an alcoholic beverage after an accident but before administration of a chemical test, the results of the test will be used for purposes of suspension or revocation.

d. German civil authorities may forcibly administer chemical tests according to their laws.

e. If a chemical test is administered by German civil authorities because the individual concerned is suspected of operating a vehicle under the influence of alcohol or other drugs, U.S. Forces authorities may also administer a test.

(1) The U.S. Forces must administer a chemical test for alcohol or other drugs on the breath or in the blood or urine of a person suspected of operating a vehicle under the influence of alcohol or other drugs on the individual's release from the custody or control of German civil authorities when either of the following applies:

(a) German authorities have not performed a chemical test for alcohol or other drugs on the breath or in the blood or urine of the person.

(b) The results of a chemical test administered to the person by the German civil authorities will not be made available to the U.S. Forces pursuant to German law.

(2) The U.S. Forces may perform a chemical test for alcohol or other drugs on the breath or in the blood or urine of a person on the person's release from lawful custody or control of German civil authorities if the U.S. Forces commander is concerned with the timeliness of receipt of the results of the German chemical test.

(3) If multiple tests are administered, the results of the test administered closest to the time of the incident normally will be used to determine necessary administrative action. U.S. Forces or German civil authorities will determine which chemical test will be administered.

f. Persons who are licensed under this regulation consent to electronic service of process of traffic tickets. Additionally, Family member dependents consent that service of process of traffic tickets issued against them is effected by delivering the ticket to their sponsor or to their sponsor's DOD e-mail address.

SECTION II
LOSS OF DRIVING PRIVILEGES

2-12. GENERAL

a. According to this regulation, three administrative actions that may result in a person's loss of driving privileges may be taken: a declaration of ineligibility, a suspension, or a revocation. These actions will be taken according to paragraphs 2-13 through 2-16. The glossary defines suspending and revoking authorities, and appendix G summarizes the responsibilities of these authorities.

b. Commanders and supervisors will inform subordinates in writing of a declaration of ineligibility, a suspension, or a revocation. The written notification will include, but not be limited to, the following information:

(1) The nature and sequence of events and the actions taken.

(2) The period the suspension or revocation action will be in effect.

(3) The actions that are required before a person may obtain or regain a U.S. Forces Certificate of License following a declaration of ineligibility, suspension, or revocation (for example, attend Army Substance Abuse Program (ASAP) or Alcohol and Drug Abuse Prevention and Treatment (ADAPT) Program training, complete POV driver orientation training, retake the written test, complete licensing requirements at a *Fahrschule* (at the individual's own expense)).

(4) Rebuttal, appeal, and reinstatement procedures (paras 2-18 through 2-20).

(5) A summary of disposition instructions for the U.S. Forces Certificate of License and license plates, if applicable.

c. Army commanders and supervisors will use DA Form 4833 or AE Form 190-1K to inform the RMV of actions they have taken.

d. Navy and Air Force elements will use AE Form 190-1K to notify the RMV of actions taken against a person licensed under this publication.

e. Commanders, directors, and supervisors may exercise the prerogative of their subordinate commanders and supervisors. This action, however, will prevent the superior commander, director, or supervisor from acting as an appellate authority (glossary) in any resulting appeal. In such cases, the next higher level commander, director, or supervisor will take action on an appeal.

f. When a person subject to this publication had his or her U.S. Forces Certificate of License suspended or revoked, he or she will not drive any vehicle (including rental and Government nontactical vehicles) in Germany.

g. The suspending or revoking authority of the sponsor will also be the suspending or revoking authority for Family members.

h. U.S. Forces driving privileges will be immediately suspended pending resolution of incidents involving intoxication or drugs for personnel covered by this publication. Driving records will be "flagged" at the RMV until the offense is resolved by the offender's immediate chain of command.

i. The provisions of this publication relating to administrative actions are applicable to U.S. Forces personnel regardless of any administrative action, fine, or criminal prosecution taken by the U.S. Forces or German civil authorities.

j. In cases where a licensee is suspected to have operated or been in physical control of a motor vehicle under any intoxication that is sufficient to impair the rational and full exercise of the mental or physical faculties, but chemical tests are unavailable or otherwise not performed, commanders, based on their discretion, may still issue a declaration of ineligibility, a suspension, or a revocation in accordance with this publication if facts and circumstances are present that indicate the person was operating or in physical control of the motor vehicle while under such intoxication. These facts and circumstances may be the result of observations by witnesses, field sobriety tests, accident reports, or other similar evidentiary sources. Nothing in this publication is intended to have any effect on a commander's authority or discretion under the Uniform Code of Military Justice (UCMJ).

2-13. DECLARATION OF INELIGIBILITY FOR A U.S. FORCES CERTIFICATE OF LICENSE

a. A declaration of ineligibility means that a person may not apply for, test for, or receive a U.S. Forces Certificate of License (AE Form 190-1F).

b. Revoking authorities will declare a person ineligible for a U.S. Forces Certificate of License for at least 90 calendar days for any of the following:

(1) Making a false statement in an attempt to get a U.S. Forces Certificate of License.

(2) Operating a POV without being licensed as required by this publication.

(3) Operating a POV with an expired license.

c. Revoking authorities may waive the ineligibility period only for cases in b(3) above if an individual's U.S. Forces Certificate of License has not been expired for more than 1 year. Additional offenses such as those in b(1) and (2) above that are committed during the time the individual's U.S. Forces Certificate of License was expired will make the individual ineligible for such a waiver. If the individual's U.S. Forces Certificate of License has not been expired for more than 1 year, the individual is eligible to renew the license immediately, but the individual is not authorized to operate a POV in Germany until he or she has completed the renewal. MP or SF may issue a citation for this violation and confiscate the expired license.

d. If an individual's U.S. Forces Certificate of License has been expired for more than 1 year, the individual is ineligible to renew the license. The individual is not authorized to operate a POV in Germany until he or she has completed the requirements in paragraph 2-2 for obtaining a new U.S. Forces Certificate of License.

e. Revoking authorities will declare a person ineligible for a U.S. Forces Certificate of License for the corresponding period of suspension or revocation for any of the following:

(1) Committing a violation while unlicensed that would be grounds for suspension or revocation if licensed.

(2) Having a military license (OF 346 or AF Form 2293) suspended or revoked.

(3) Operating or otherwise being in physical control of a POV after being declared ineligible for a U.S. Forces Certificate of License.

f. Officers in charge of local DTSs will declare a person ineligible for a U.S. Forces Certificate of License for the following periods:

(1) 1 year for using unauthorized assistance during an examination.

(2) 60 calendar days for failing to pass the written examination after three attempts. Any failure thereafter will result in an additional 60-day ineligibility.

g. Persons declared ineligible will remain ineligible until they successfully petition the revoking authority to request authorization for a U.S. Forces Certificate of License.

2-14. SUSPENSIONS

A suspension suspends a U.S. Forces Certificate of License for a specific period of time, after which the U.S. Forces Certificate of License is automatically reinstated. Suspensions will be discretionary or mandatory and for periods specified in subparagraphs a and b below. The period of suspension will begin on the date the U.S. Forces Certificate of License is confiscated. Suspending authorities may suspend an individual's U.S. Forces Certificate of License for a longer period than prescribed below when appropriate (up to 1 year). Longer suspension periods are appropriate, for example, when other measures have failed to improve a driver's performance, a driver commits repeated serious moving violations, or an individual repeatedly violates the installation parking policy. Offenses involving alcohol or controlled substances require the licensee to attend and successfully complete ASAP or ADAPT Program training and POV driver orientation training. If the offense occurred while riding a motorcycle, military personnel must also complete the motorcycle orientation training to have the motorcycle endorsement reinstated to the license. The U.S. Forces Certificate of License will not be reinstated until these requirements are met.

a. Discretionary Suspension. Discretionary suspensions may be assessed for periods not to exceed 1 year. The suspending authority may suspend a licensee's driving privileges for the following periods:

(1) A period of time necessary to—

(a) Evaluate the licensee's physical or mental disability after a physician has submitted a statement that the individual is incapable of safely operating a POV. A U.S. Forces Certificate of License will be returned only when a physician provides a statement that the individual is capable of safely operating a POV.

(b) Assess the licensee's driving skills. When the suspending authority determines that the individual lacks the necessary driving skills or knowledge, the authority may suspend the U.S. Forces Certificate of License until the licensee has retaken and passed the tests required by this publication. If the individual fails to pass the tests required to obtain a Government drivers license (OF 346 or AF Form 2293), his or her U.S. Forces Certificate of License may be suspended. (This suspension applies only to Navy and AF personnel.)

(c) Investigate incidents involving the licensee. The driving privileges of involved persons may be suspended until the investigation is completed and final action is taken. In alcohol-related incidents, the commander or supervisor must immediately suspend the licensee's U.S. Forces Certificate of License pending resolution.

(d) Review the licensee's failure to remove or cover indecent or obscene matter (glossary) on a POV or to move the POV displaying indecent or obscene matter from the installation after being asked to do so (para 3-26).

(2) A maximum of 90 calendar days for—

(a) Owning or operating an unregistered or uninsured POV (first or second offense).

(b) Operating a motor vehicle while under any intoxication that is sufficient to impair the rational and full exercise of the mental and physical faculties.

(c) Operating a nonmotorized vehicle (glossary) while under any level of intoxication that is sufficient to impair the rational and full exercise of the mental and physical faculties. This level of intoxication can be demonstrated based on the results of a chemical test or based on the facts and circumstances surrounding the incident itself.

(3) A maximum of 180 calendar days for—

(a) Displaying a lack of good judgment about safe and prudent operation of a POV (glossary).

(b) Misconduct that indicates the licensee's poor qualifications as a driver. Examples are—

1. Abuse of alcohol or controlled substances. This may include incidents that occur even when the individual in question is not operating a POV.

2. Habitual acts of violence.

3. Numerous (three or more) nonmoving violations.

4. Allowing someone to operate a POV without a U.S. Forces Certificate of License or without a U.S. Forces Certificate of License valid for the vehicle class operated (except as provided for in para 4-10).

(c) Violating the provisions of paragraphs 3-23 or 3-26.

(d) Transferring license plates to another POV.

(4) A maximum of 1 year for—

(a) Committing two or more offenses as stated in (3) above or (b) below in a 180-day period.

(b) Committing a traffic offense outside Germany that would require suspension or revocation under this publication if committed in Germany.

(c) Using or allowing someone else to use a U.S. Forces Certificate of License in an unlawful or fraudulent manner.

b. Mandatory Suspension. Mandatory suspensions will be assessed for 7, 30, 90, or 180 calendar days as indicated below. The suspending authority will suspend driving privileges as follows:

(1) 7 calendar days for—

(a) "Texting" or using a cell phone or computer while operating a POV.

(b) Not wearing or improperly using a seatbelt while operating a POV or not requiring passengers to wear seatbelts or restraining devices (glossary) while riding in a POV. This also applies to motorcyclists who do not wear proper protective clothing while riding a motorcycle or do not require their passengers to do so.

(2) 30 calendar days for—

(a) A second occurrence of the offenses in (1)(a) and (b) above. This also requires a counseling letter from the chain of command.

(b) Not paying the license fee within the time specified after notification that the initial check was returned for insufficient funds.

(c) First offenses of abusing petroleum, oils, and lubricants (POL) privileges by Servicemembers, civilian employees, contractors, or Family members. This includes a 30-day suspension of the fuel-ration card, which will run concurrently with the U.S. Forces Certificate of License suspension (AE Reg 550-175/CNE-CNA-C6F Inst 5840.1F/USAFE Inst 51-702).

(3) 90 calendar days for—

(a) Operating a motor vehicle with a BAC of 0.05 percent but a blood-alcohol level by volume of whole blood of less than 0.08 percent (measured in grams (g) per 100 milliliters (mL)). This offense will be reported as an alcohol-related traffic offense, driving while impaired, in violation of Article 134, UCMJ, for Servicemembers and AE Regulation 27-9, section I, paragraph 4g, for civilians. Appendix J, table J-1, converts German breath-alcohol levels into U.S. blood-alcohol levels.

(b) Operating a class of vehicle other than the class for which licensed.

(c) Three or more offenses of owning or operating an unregistered or uninsured POV within a 5-year period.

(d) Second offenses of abusing POL privileges by Servicemembers, civilian employees, contractors, or Family members. This also includes a 90-day suspension of the fuel-ration card privileges, which will run concurrently with the U.S. Forces Certificate of License suspension (AE Reg 550-175/CNE-CNA-C6F Inst 5840.1F/USAFE Inst 51-702).

(e) Owning or operating an unregistered or uninsured POV (third offense).

(4) 180 calendar days for—

(a) Having two convictions or having received two nonjudicial punishments for reckless driving in a 1-year period.

(b) Accumulating 12 or more traffic points in a 1-year period (12 consecutive months) or 18 traffic points in a 2-year period (24 consecutive months).

(c) Third and subsequent offenses of not wearing or improperly using a seatbelt while operating a POV or not requiring passengers to wear seatbelts or restraining devices while riding in a POV. This also applies to motorcyclists who do not wear proper protective clothing while riding a motorcycle or do not require their passengers to do so.

(d) Disposing of a POV in a manner not authorized by this publication or AE Regulation 550-175/CNE-CNA-C6F Instruction 5840.1F/USAFE Instruction 51-702.

(e) Fleeing or attempting to flee an accident or a police officer after leaving the scene of an accident.

(f) Third offenses of abusing POL privileges by Servicemembers, civilian employees, contractors, or Family members. This includes a 180-day suspension of the fuel-ration card, which will run concurrently with the U.S. Forces Certificate of License suspension (AE Reg 550-175/CNE-CNA-C6F Inst 5840.1F/USAFE Inst 51-702).

(5) For drivers who have not yet reached their 21st birthday and are operating a POV on or off a U.S. military installation in Germany with any amount of alcohol in their blood of up to 0.049 percent by volume of whole blood, driving privileges will be suspended for 30 calendar days for a first offense, 60 calendar days for a second offense, and 90 calendar days for a third offense. These drivers may also be subject to a monetary fine or other civilian administrative action if caught by German authorities off the installation. These individuals will be titled with "Alcohol-Related Traffic Offense, Operating a POV with a Positive BAC/Violation of ART 134 UCMJ/AER 27-9." (App J, table J-1, converts German breath-alcohol levels into U.S. blood-alcohol levels.)

2-15. REVOCATIONS

Revocations are mandatory, take effect immediately, and remain in effect indefinitely until a licensee has submitted a petition of reinstatement. The period of revocation begins on the date the U.S. Forces Certificate of License is confiscated. Offenses requiring mandatory revocation are listed in subparagraphs a and b below. Petitions for reinstatement are authorized only after 1 year for offenses in subparagraph a below and only after 5 years for offenses in subparagraph b below.

a. A petition for reinstatement is authorized after 1 year for—

(1) Refusing to take or failing to complete a lawfully requested chemical test under the implied consent provisions (para 2-11).

(2) Operating a motor vehicle with a BAC of 0.08 percent by volume of whole blood (0.08 g of alcohol per 100 mL of blood) or higher. (App J, table J-1, converts German breath-alcohol levels into U.S. blood-alcohol levels.)

(3) Testing positive for a substance listed in Article 112a of the UCMJ as a result of a chemical test administered in accordance with paragraph 2-11.

(4) Being convicted by a military or civilian court of, receiving nonjudicial punishment for, or having been subjected to military or civilian administrative actions for—

(a) Manslaughter or negligent homicide resulting from operating a POV.

(b) Drunk driving or driving while impaired by a substance described in Article 112a of the UCMJ.

(c) Any offense in which a motor vehicle is used if the same or a closely related offense carries a maximum punishment of confinement at hard labor for 1 year or more or a punitive discharge under the UCMJ.

(d) Fleeing the scene of an accident that resulted in death or personal injury (hit and run).

(e) Committing perjury or making a false affidavit or statement to responsible officials about owning or operating motor vehicles.

(f) Obtaining a U.S. Forces Certificate of License or helping someone else obtain a U.S. Forces Certificate of License through unauthorized means or by using false pretenses to avoid licensing requirements.

(5) The fourth abuse of POL privileges by Servicemembers, civilian employees, contractors, or Family members. Fuel-ration cards will be canceled for the period of revocation (AE Reg 550-175/ CNE-CNA-C6F Inst 5840.1F/USAFE Inst 51-702).

b. A petition for reinstatement is authorized after 5 years for—

(1) Operating or otherwise being in physical control of a POV while the license was suspended, revoked, or after a person was declared ineligible.

(2) Committing, for the second time within the past 5-year period, any of the following offenses:

(a) Operating a motor vehicle with a BAC of 0.05 percent or higher by volume of whole blood (measured in grams of alcohol per 100 mL (g/100 mL) of blood).

(b) Refusing to take a chemical test.

(c) Testing positive for a substance described in Article 112a of the UCMJ as a result of a chemical test administered in accordance with paragraph 2-11.

c. Individuals who have a record of three alcohol-related traffic offenses or two or more offenses of operating or otherwise being in physical control of a motor vehicle while a license is revoked over any time period will be prohibited from ever receiving a U.S. Forces Certificate of License. No exceptions to this policy are permitted for individuals who have been convicted by a court-martial or civilian court or tribunal or received nonjudicial punishment or any combination thereof for three alcohol-related offenses.

d. The RMV will notify the U.S. State or territory of the United States drivers agency of personnel whose driving privileges have been revoked for 1 year or more following final adjudication of an intoxicated-driving offense, drug-related offense, or for refusing to submit to a lawful BAC test. The notification will be sent to the State in which the person's drivers license was issued. This notification will include the basis for the revocation and the person's blood-alcohol level, drug-use level, or refusal to submit to the test.

2-16. REVOCATION BY CIVIL AUTHORITIES

a. U.S. Forces authorities must notify the RMV immediately on receiving information or reports from German civil authorities that a person has been prohibited from driving in Germany (privileges withdrawn, suspended, or revoked). On receiving these reports, the designated suspending or revoking authority will suspend or revoke the person's driving privileges. If required by this publication, the designated suspending or revoking authority will suspend or revoke driving privileges for a period longer than requested by the civil authorities. In addition to the designated suspending or revoking authorities, the RMV is authorized to suspend or revoke the person's driving privileges.

b. If privileges have been suspended by a German court or civil authority, requests for restricted driving privileges will not be granted until the German suspension has expired. Individuals may petition the German court or civil authority for restricted driving privileges.

(1) Traffic tickets issued by German civil authorities may contain a 4-month grace period for the execution of a suspension. In such cases, the suspending authority may grant up to a 4-month grace period unless unit or organization interests direct otherwise. Suspending authorities will not extend a grace period beyond the period stated on the German ticket under any circumstances. The suspending authority will submit AE Form 190-1K without delay to the RMV and indicate the date on which the suspension will take effect.

NOTE: Granting a grace period does not affect the payment of the administrative fine imposed with the ticket. The fine must be paid within 4 weeks from the date the ticket was served, unless the individual concerned appealed the ticket in the German legal system.

(2) Suspending and revoking authorities may defer suspension or revocation action if the individual concerned presents documentation showing that the ticket was appealed in the German legal system. Before granting such deferment, the suspending or revoking authority will notify the RMV and the responsible LLA of his or her intent and forward a copy of the documentation to these agencies for verification.

(3) Regardless of any appeal in the German system, military authorities may use a German traffic ticket as evidence for suspension and revocation action under this regulation.

c. Persons subject to this publication will not drive any vehicle in Germany if their privileges to drive have been withdrawn by civil authorities or if their U.S. Forces Certificate of License has been suspended or revoked. Military commanders should refer to AE Regulation 600-55 for actions that may be taken against military drivers (that is, drivers holding OF 346 or Air Force Form 2293).

2-17. ADMINISTRATIVE ACTIONS, REPRIMANDS, REPORTS, AND DISPOSITION PROCEDURES

a. General Officer Reprimands and Administrative Actions. Army commanders will take appropriate action against intoxicated drivers.

(1) A written reprimand, administrative in nature, will be issued to active-duty Soldiers in the cases described in (a) through (c) below. Any general officer (GO) or any officer frocked to the grade of brigadier general (BG) may issue this reprimand. Usually the GO exercising general court-martial convening authority (GCMCA) jurisdiction over the Soldier will issue the reprimand.

(a) Refusal to take or failure to complete a lawfully requested test to measure alcohol or drug content of the blood, breath, or urine, either on or off the installation, when there is reasonable belief of driving under the influence of alcohol or drugs.

(b) Operating or being in physical control of a motor vehicle with a BAC of 0.08 percent by volume of whole blood (0.08 g of alcohol per 100 mL of blood) or higher, regardless of any other charges.

(c) Operating or being in physical control of a motor vehicle, either on or off the installation, when lawfully conducted chemical tests indicate the presence of illegal drugs.

(2) Commanders may review the Service records of active-duty Soldiers apprehended for offenses described in (1) above to determine if any of the following actions should be taken:

(a) Administrative reduction according to AR 600-8-19.

(b) Bar to reenlistment according to AR 601-280.

(c) Administrative separation according to AR 635-200.

(3) A written reprimand, administrative in nature, may be issued to active-duty Soldiers in the cases described in (a) through (c) below. Any GO or any officer frocked to the grade of BG may issue this reprimand. Usually the GO exercising GCMCA jurisdiction over the Soldier will issue the reprimand. For Army personnel, the reprimand will be filed in accordance with AR 600-37.

(a) Operating a motor vehicle with a BAC of at least 0.05 percent but less than 0.08 percent by volume of whole blood (grams of alcohol per 100 mL of blood), regardless of any other charges.

(b) Operating a motor vehicle while under any intoxication that is sufficient to impair the rational and full exercise of the mental and physical faculties.

(c) Operating a nonmotorized vehicle while under any intoxication that is sufficient to impair the rational and full exercise of the mental and physical faculties.

b. Reports to the RMV. Any authority who assesses traffic points or who suspends, revokes, or declares a person ineligible for a U.S. Forces Certificate of License will immediately report the action to the DES or the CSF. Reports will be made using DA Form 4833, AE Form 190-1AX, or AE Form 190-1K. The DES or CSF will review the action for propriety and send the completed action to the RMV. When a temporary suspension is based on physical or mental disability, the physician's statement will accompany the report. For revocations, the individual's U.S. Forces Certificate of License must accompany the report.

c. Disposition of U.S. Forces Certificates of License and License Plates.

(1) Following suspension, the suspending authority will keep the U.S. Forces Certificate of License until the suspension expires.

(2) Following revocation, the revoking authority will send the U.S. Forces Certificate of License to the RMV (b above).

(3) After suspension of more than 30 calendar days or revocation, the POV will be registered as nonoperational (para 3-8c) and license plates will be returned to the RMV for destruction unless a Family member has a valid U.S. Forces Certificate of License and the POV registration lists the Family member as a joint owner.

2-18. REBUTTAL PROCEDURES TO LICENSE SUSPENSIONS AND REVOCATIONS

a. The suspending or revoking authority will evaluate each case to determine appropriate action. Only pertinent facts may be used to determine the appropriate action to be taken. Whether administrative action is taken or not, the RMV must be immediately informed of the decision. If a decision is made to impose administrative sanctions, the suspending or revoking authority will—

(1) Notify the person in writing that he or she has 10 calendar days to submit a rebuttal. A request for a hearing may be granted at the discretion of the suspending or revoking authority.

(2) Suspend the person's driving privileges pending the outcome of rebuttal proceedings. Alcohol and drug offenses automatically suspend driving privileges until final determinations are made.

b. Once the rebuttal is reviewed, the suspending or revoking authority will notify the RMV in writing of the action taken.

c. In cases in which an individual is charged with operating a POV with a BAC of 0.05 percent or more by volume of whole blood or while under the influence of any controlled substance, the imposition of administrative action to suspend or revoke the U.S. Forces Certificate of License is mandatory, regardless of whether or not UCMJ action is taken. The suspending or revoking authority may "find in favor" of the person (that is, not declare a person ineligible, not suspend, or not revoke the license) only if the person was not operating the POV or the BAC results or drug-test results were incorrect or invalid.

2-19. APPEALS

Adverse actions against a person may be appealed through command channels to the appellate authority (glossary), except for point-accumulation actions and actions ordered by German authorities that may be appealed only through the German legal system. Appendix G provides a summary of appellate actions. A copy of actions taken by appellate authorities will be sent to the RMV. If the RMV does not receive the appeal by the suspense date indicated on the RMV notification letter, the date of the notification letter will be used as the final-action date against the offender.

2-20. PETITIONS FOR REINSTATEMENT OF DRIVING PRIVILEGES (REVOCATIONS AND RESTRICTED DRIVING PRIVILEGES)

a. An individual whose driving privileges have been revoked may petition for reinstatement of driving privileges through the revoking authority to the reinstating authority (glossary) (b below) according to the limits in paragraph 2-15. If the license was revoked because of offenses involving alcohol or controlled substances, the prerequisites for reinstatement are the successful completion of ASAP or ADAPT Program training and attending the POV drivers orientation training. Commanders considering petitions for reinstatement should consider all relevant facts related to the original revocation, including the individual circumstances of each case and the deployment time, if any, of the individual involved.

b. For Army personnel, the authority to reinstate revoked driving privileges following a declaration of ineligibility, a suspension, or a revocation for an alcohol- or drug-related incident will be the USAG commander or an authority designated in writing by the USAG commander. For Navy and Air Force personnel, the authority to reinstate revoked driving privileges will be according to OPNAV 11200.5C and AFI 31-218IP (installation commander or delegate), respectively.

c. If a petition for reinstatement is approved, the individual must successfully complete the requirements in paragraph 2-2 and have a valid country license for the vehicle class.

d. The revoking or reinstating authority may grant a request for restricted driving privileges in the following cases if the requester has a valid country license:

(1) An individual whose driving privilege has been suspended may request approval from the revoking authority (except for 7-day suspensions). If the request is approved, the revoking authority will provide a written statement specifying the exact hours and specific locations that the person may operate a POV. This statement must be provided to the local DES or CSF, the RMV, and the licensee.

(2) An individual whose driving privilege has been revoked (with petition for reinstatement authorized after 1 year) may request approval from the reinstating authority. If the request is approved—

(a) The requester will retake the required tests (para 2-2) if he or she has a valid country license for the vehicle class revoked and has completed the POV drivers orientation training. Completion of ASAP or ADAPT Program training is also required if the revocation is for an offense involving alcohol or controlled substances.

(b) The reinstating authority will provide a written statement specifying the exact hours and specific locations that the person may operate a POV. This statement must be provided to the local DES or CSF, the RMV, and the licensee.

e. The written statement (d(1) and (2)(b) above) and restricted U.S. Forces Certificate of License must be in the person's possession when the person is operating a class 3 POV.

f. Individuals whose driving privileges have been revoked indefinitely (with petition for reinstatement authorized only after 5 years) or permanently will not be granted restricted driving privileges.

2-21. TRAFFIC-POINT ASSESSMENT SYSTEM

a. Table 2-1 is the traffic-point table. The traffic-point assessment system will not be modified or altered (for example, giving more or fewer points than indicated). If the driver commits more than one offense at a time, only the highest-point offense will be used plus one point if the driver is at fault for causing an accident. The point system applies to everyone holding a U.S. Forces Certificate of License who has been found by commanders, supervisors, or military or German civil courts to have committed violations. Points will be assessed for violations committed while operating either military vehicles or POVs. On receipt of a traffic ticket, the unit commander or supervisor will conduct an inquiry and initiate a report of action (b below). Subordinates and their Family members have the right to appeal any adverse action taken against them (para 2-19). An appeal must be filed within 60 calendar days after the offense. If an appeal is not filed within 60 calendar days, the offense will become a permanent part of the person's driving record.

Table 2-1
Traffic-Point Table

Violation	Points Assessed
Drunken or reckless driving (operating a motor vehicle with a BAC of 0.08 g or higher of alcohol per 100 mL of blood, or willful and wanton disregard for the safety of people or property (UCMJ, Art 111))	6
Testing positive for a substance listed in Article 112a of the UCMJ as a result of a chemical test administered in accordance with paragraph 2-11	6
Owner knowingly and willfully permitting a person to operate a motor vehicle when unlicensed or mentally or physically impaired (for example, intoxicated)	6
Fleeing or leaving the scene of an accident after causing property damage	6
Operating a motor vehicle with a BAC of at least 0.05 percent but less than 0.08 percent blood-alcohol level by volume of whole blood (measured in grams per 100 mL)	6
Taking part in speed contests	6
Exceeding stated speed limits:	
a. 1 to 10 miles per hour (mph) (1 to 16 kilometers per hour (kph)) over the posted speed limit	3
b. 11 to 15 mph (17 to 25 kph) over the posted speed limit	4
c. 16 to 20 mph (26 to 32 kph) over the posted speed limit	5
d. 20 or more mph (33 or more kph) over the posted speed limit	6
Driving too fast for conditions	4
Following too closely	4
Failing to yield right-of-way to an emergency vehicle	4
Failing to stop for a schoolbus or at a school-crossing signal	4
Failing to obey traffic signals or traffic instructions of a law-enforcement officer, a traffic warden, or any official regulating traffic device requiring drivers to stop, yield the right-of-way, not enter, or follow a specified direction of travel	4
Passing improperly	4
Failing to yield right-of-way (no official sign involved)	4
Failing to require any passenger on a motorcycle to wear required safety devices (for example, protective eye device, helmet, proper protective clothing) on or off military installations	3
Failing to report involvement in an accident	3
Turning improperly (no official sign involved)	3
Overtaking improperly	3
Committing other moving violations (for example, operating a POV with an expired drivers license, failing to maintain control, inattentive driving, improper backing)	3
Operating a POV while wearing headphones, using a cell phone (other than a hands-free device) or other devices for oral communications or text messaging, using a calculator, or taking photographs	3

Table 2-1
Traffic-Point Table—Continued

Violation	Points Assessed
Operating a POV that does not meet the mechanical standards in appendix C	3
Operating a vehicle that does not meet the nonmechanical standards in appendix C (for example, window-tinting, exhaust noise level, chassis or frame alteration, damaged glass, wheel spinners) or any violation capable of endangering the driver, passengers, or other persons on or near the roadway where the vehicle is being operated	3
Owning or operating an unregistered or uninsured POV	2
Failing to use available restraint-system devices or not requiring all passengers to use restraint systems; allowing children 12 years of age or younger to occupy the front seat without authorized safety equipment suitable for the child and permitted for use in front seats (that is, equipment approved by the United States Department of Transportation (DOT) or approved in Germany under the United Nations Economic Commission for Europe Regulation (ECE-R) 44/03); allowing children 12 years of age or younger, or shorter than 150 centimeters (4 feet, 11 inches), to sit in the back seat without DOT-approved restraint equipment suitable for the child	2
Driving too slowly for conditions	2
Displaying license plates or decals in violation of this publication	2
Making excessive noise while operating a POV (for example, inside: radio or stereo, outside: producing excessive exhaust noise or squealing tires (“burning rubber”))	2
Causing an accident (used only as an addition to points assessed for a specific offense)	1
Failing to have a U.S. Forces Certificate of License and ID card in possession when operating a POV	1
Operating a POV without corrective lenses when the U.S. Forces Certificate of License requires wear of lenses	1
Parking a POV where prohibited (for example, against the flow of traffic, double-parking)	1
NOTE: If alcohol is involved in any of the above violations, ASAP or ADAPT Program attendance and completion of POV drivers orientation training will be required.	
Possessing an open container or open containers of an alcoholic beverage or the driver allowing passengers to possess open containers of an alcoholic beverage on a military installation	1

b. The suspending authority will assess traffic points and sign DA Form 4833, AE Form 190-1AX, or AE Form 190-1K and send the signed form to the DES or CSF within 45 calendar days after the offense. If the suspending authority fails to respond within 60 calendar days after receiving DA Form 3946, AE Form 190-1AX, or DA Form 3975, the DES or CSF will assess traffic points and send DA Form 4833, AE Form 190-1AX, or AE Form 190-1K to the RMV. Local DESs and CSFs will inform suspending authorities of assessments. To cancel a DES or CSF action, the commander or supervisor will send a written notice to the RMV within 60 calendar days after notification.

c. Commanders or suspending authorities who take “no action” on DA Form 4833, AE Form 190-1AX, or AE Form 190-1K must provide an explanation (for example, the investigation revealed that the Soldier did not commit the offense and is innocent). If no explanation is provided, the USAREUR PM will take administrative action to properly assess points.

d. Traffic points will be posted on DA Form 3626 (para 2-22).

e. The RMV will notify the commander or supervisor concerned when a subordinate's point assessments reach a total of—

(1) 6 points (no action required).

(2) 12 or more points in 1 year.

(3) 18 or more points in 2 years.

f. The commander or supervisor will take action to suspend the U.S. Forces Certificate of License for 180 calendar days (para 2-14b(4)) when a person reaches the limits in either e(2) or (3) above.

g. Points assessed against an individual will remain in effect for 2 years. The RMV will maintain driving record entries as required by AR 190-5/OPNAV 11200.5D/AFI 3l-218(I) and AFI 31-218IP.

2-22. REPORTS OF ACTIONS TAKEN

a. Commanders and supervisors will use DA Form 3626 to record point accumulation, counsel erratic drivers, and suspend or revoke driving privileges. These records will be posted in the Vehicle Registry Inquiry Network (VERINET) database for access by all law-enforcement personnel.

b. Using DA Form 3626 does not relieve commanders and supervisors from reporting revocations, suspensions, declarations of ineligibility, or traffic-point assessments. For these actions, DA Form 4833, AE Form 190-1AX, or AE Form 190-1K will be sent to the DES or CSF, who will send it to the RMV. The DES or CSF will assess traffic points when the commander or supervisor fails to respond within 60 calendar days after receiving DA Form 3946, DA Form 3975, or AE Form 190-1AX. The DES or CSF will send the appropriate form to the RMV.

c. The USAREUR PM will administratively assess points if a commander or supervisor returns any report of action taken (DA Form 4833, AE Form 190-1AX, or AE Form 190-1K) with "no action taken," but failed to complete the remarks block to explain why no action was taken (para 2-21c).

CHAPTER 3
POV REGISTRATION

3-1. POLICY AND ENTITLEMENT

a. The following personnel will register their POVs with the U.S. Forces in Germany immediately after taking possession of them:

(1) Military and civilian personnel. Vehicles must be registered in the name of the sponsor. Spouses may appear on the registration as joint owners, but authorization to register will be based solely on logistic-support authorization in AE Regulation 600-700.

(2) Nonappropriated fund (NAF) organizations. NAF organizations must initially register and pay the registration fee for POVs that the NAF organization owns.

(3) Other authorized agencies or organizations in accordance with the provisions of international law and the fuel-card agreement.

b. U.S. Forces-registered POVs will not be used for commercial enterprises, nor will they display any advertisement for any business or commercial enterprise (AE Reg 210-70).

c. Persons who transfer to Germany from a command in another European country and whose POVs have been registered with civil or U.S. Forces registration authorities in that country must register their POVs with the RMV within 30 calendar days after arriving in Germany.

d. License plates will be issued for the vehicle specified on the POV registration certificate and will not be transferred to any other vehicle.

e. A general or special power of attorney (POA) will be accepted to register a POV only if the grantee is the spouse of the registrant.

f. The sponsor's information must be provided on all applications for a POV registration (AE Form 190-1AA), regardless of who legally owns the POV.

3-2. LIMITS ON THE NUMBER OF REGISTERED POVs

a. The number of POVs a person may register at any one time is limited as follows:

(1) Accompanied Personnel. Accompanied personnel (glossary) are limited to three POVs and two recreational vehicles.

(2) Unaccompanied Personnel. Unaccompanied personnel are limited to two POVs and one recreational vehicle.

b. The limits in subparagraph a above do not apply to—

(1) NAF custodians.

(2) Other authorized agencies and organizations.

(3) Racing and offroad recreational vehicles (glossary) (para 3-24).

c. Unit commanders may approve requests for additional vehicles for military and civilian personnel in their command. Civilian personnel assigned to units or organizations that do not have a military commander may request approval for additional vehicles from the USAG commander or the USAFE/AFAFRICA unit or squadron commander in the area in which they are assigned. These commanders may delegate approval authority to their deputy, the DES, or the DOL. Personnel of all grades must use AE Form 190-1AG to request a waiver to exceed the POV limits in subparagraph a above. Only one POV may be included on each AE Form 190-1AG. Requests for additional vehicles beyond those authorized by this publication may also require approval of the USAG commander or the USAFE/AFAFRICA MSG or LSG commander or his or her designated representative in the garrison. USAG commanders and USAFE/AFAFRICA MSG and LSG commanders will determine if it is necessary to add more stringent controls for POVs in their communities or areas of responsibility (AORs).

d. Individuals may not register additional vehicles until all of their existing registrations are in compliance with this regulation.

3-3. MECHANICAL STANDARDS

a. To register a POV as operational, the owner must ensure that it meets the mechanical standards in appendix C.

b. POVs must meet the minimum standards of exterior condition acceptable in the military and civilian community. Deficiencies (for example, extensive body damage, missing component parts, deterioration) will prevent a POV from meeting these standards.

c. First-line supervisors or platoon sergeants will visually inspect subordinates' POVs at least every 180 calendar days for violations of basic safety standards (for example, worn or bald tires, the wrong type of tires for the current season (note below), inoperative lights, broken windshields and glass, dangerous projections caused by rust, accidents) and record their findings on DA Form 3626. Supervisors will enforce basic safety standards by ensuring their subordinates do not operate unsafe vehicles until the vehicle is repaired, registered as nonoperational, or properly disposed of.

NOTE: On 29 November 2010, the German Parliament enacted new legislation that clarifies the rules for procurement, nomenclature, manufacturer identification markings, and use of winter tires in Germany. Motor vehicles, including motorcycles and four-wheel-drive vehicles, must have clearly marked winter or all-season tires when there is black ice, snow, slush, ice, or frost on German roads. A winter tire is any tire marked by the manufacturer with the snowflake logo or M + S symbol, which stands for mud and snow (*Matsch und Schnee*), including all-season tires. In Germany, the minimum legal tire tread depth is 1.6 millimeters (mm). For maximum performance, 4 mm of tire tread depth are recommended for winter tires. Austrian law mandates 4 mm minimum tread depth for winter tires, and other European countries have distinct winter driving laws as well. Drivers should check with local authorities before crossing borders. During the winter months, some areas of Germany may require snow chains, but only as directed by police or road signs. The maximum speed limit while driving a vehicle with chains is 50 kph. While the law does not mandate calendar dates during which snow tires are required, it is recommended to have snow tires mounted from early October until early April. Under the new rules, fines have been doubled. Drivers caught using summer tires in ice, snow, or slush, and drivers who cause an accident or obstruct traffic because they use inappropriate tires during winter conditions will be fined by German authorities. In addition, some insurance companies may deny coverage to motorists driving with summer tires on wintery roads. Drivers who are unsure about winter-tire requirements can contact their local vehicle-registration or safety office. A list of vehicle-registration locations and other information for U.S. Forces personnel who drive in Europe is available on the USAREUR RMV website at *http://www.eur.army.mil/rmv*.

3-4. INSPECTION REQUIREMENTS

a. Mechanical inspections may be completed up to 75 calendar days before a registration expires. Inspections older than 75 calendar days at the date of expiration will not be accepted as proof of inspection. No POV will be registered for more than 24 months without an inspection, except new POVs (e below). Inspections of POVs conducted under the German system (for example, conducted by the *Technischer Überwachungsverein* (*TÜV*) or the *Deutscher Kraftfahrzeug-Überwachungs-Verein (DEKRA)* (Technical Vehicle Inspection Association)) are valid and honored for 30 calendar days from the date of the inspection.

b. Inspection requirements (app C) must be met before registering a POV as operational.

c. An inspection is required when a POV registration has been canceled for failure to renew the registration (AE Form 190-1A) or to provide proof of liability insurance. An inspection may also be required on request of the RMV or German authorities if it appears that a POV has been modified (for example, windows have been tinted, exhaust system has been modified). Failure to comply with inspections requests from the RMV or German authorities will result in the RMV canceling the POV registration and fuel card. The RMV will notify the MP or SF of the cancellation, and the POV owner must register the POV as nonoperational (para 3-8).

d. Mechanical-inspection requirements for POVs for which ownership is transferred are as follows:

(1) If a POV is less than 10 model years old—

(a) The POV may be inspected within 30 calendar days before the transfer. In this case, the buyer will receive a 1- or 2-year registration.

(b) The buyer may accept the seller's POV registration expiration date without a mechanical safety inspection. To be able to do so, the registration must have at least 60 calendar days remaining at the time of transfer.

(2) If a POV is 10 or more model years old, the POV must pass a mechanical safety inspection within 30 calendar days before the date of transfer.

NOTE: A POV is considered 10 model years old when the model year ends in the same digit as the current calendar year, regardless of whether the POV is actually 10 years old. For example, a POV manufactured in November 2006 will be considered 10 model years old in January 2016, even though the POV will not be 10 years old until November 2016.

(3) Appendix C, paragraph C-3, lists actions to be taken if a POV fails the mechanical safety inspection.

e. New POVs that have never been registered in any system for more than 3 months are exempt from the requirement for a mechanical inspection before initial registration. Vehicles that were previously registered in the German system must provide proof of deregistration from the German registration system. The registration of these vehicles can be valid for up to 36 months. Registrants, however, must show a valid first-aid kit, a warning triangle, and a warning safety vest to the FRS. Within 60 calendar days from the date of initial registration, a copy of the manufacturer's certificate or statement of origin must be presented to the local FRS for chassis confirmation by the FRS clerk.

f. POVs that are less than 10 model years old may be inspected and registered for 12 or 24 months.

g. POVs that are more than 10 model years old must be inspected and registered annually. German safety inspections are only valid for 30 calendar days.

h. All FRSs will accept inspection stamps on AE Forms 190-1AA from other military communities for processing. FRSs will also accept German safety inspections.

i. The POV inspector will—

(1) Inspect every POV for installation of German plates. The inspector will indicate the results of the inspection by checking the appropriate block under Mechanical Safety Inspection (block 50) on AE Form 190-1AA (2 long plates; 1 long plate, 1 short plate; or 2 short plates). The inspector will verify his or her determination by signature or stamp.

(a) The use of short plates violates the agreement between the United States and Germany and will not be approved except for vehicles that, by construction, will not take long plates.

(b) Approving authority for one short front plate or two short plates rests with the Director, BMD, 405th AFSB, and the RMV. The BMD, 405th AFSB, will make recommendations for correct plate sizes and process short license plates. Where necessary, the RMV will make the final determination on plate sizes to be issued.

(c) When the construction of a vehicle allows the use of the long German license plates, those plates must be used.

(2) Inspect POV inspection stations in coordination with HQ USAFE/A4RT.

(3) Determine whether a POV has U.S. or foreign specifications and stamp AE Form 190-1AA accordingly.

3-5. REGISTRATION REQUIREMENTS

a. To obtain a U.S. Forces POV registration, applicants must—

(1) Have a valid U.S. Forces Certificate of License or a temporary U.S. Forces Certificate of License (AE Form 190-1G).

(2) Have a valid DOD ID card with orders or official documents assigning them to Germany with logistic support authorized (AER 600-700).

(3) Go to their per-duty assigned community FRS to do the following:

(a) Complete AE Form 190-1AA.

(b) Provide proof of—

1. Ownership (para 3-6a).

2. Mechanical inspections that are not older than 75 calendar days for U.S. inspection stations and 30 calendar days for German inspection stations (for example, *TÜV*, *DEKRA*) (para 3-4).

3. Third-party liability insurance. An insurance confirmation card (ICC) from an authorized insurance company (glossary) is the only acceptable proof of insurance for registration under this publication and must be submitted every time a car is registered or reregistered with new license plates.

a. The insurance must be in effect at the time of registration. ICCs must show an issue date that is less than 120 calendar days before the date of application. ICCs with a future effective date will not be accepted.

b. If the effective date is left blank or noted "DOR" (date of registration) or "*Tag der Zulassung*" (date of registration), the ICC will be accepted if the issue date is not older than 120 calendar days.

c. The name on the ICC must match the name of the owner on the registration application (AE Form 190-1AA).

d. The POV make and chassis number or vehicle identification number (VIN) must match that on AE Form 190-1AA.

4. Customs clearance, if necessary (AE Reg 550-175/CNE-CNA-C6F Inst 5840.1F/ USAFE Inst 51-702).

(c) Pay the registration fee (check, money order, or credit card).

b. The FRS will give the applicant the POV registration, license plates, and decals.

c. For used POVs purchased from vehicle dealers in Germany, the FRS will verify the POV—

(1) Chassis number or VIN to ensure there is no previous lien.

(2) Has cleared customs if the vehicle was purchased from the vendor's customs warehouse (*Zolllager*) with AE Form 550-175A.

(3) Is not presently registered in the U.S. Forces registration system or the German system.

d. U.S. Forces personnel stationed outside of Germany and authorized U.S. Forces logistic support are authorized to be issued U.S. Forces license plates for 90 calendar days to transport their POV out of Germany. These personnel must comply with the registration procedures in subparagraph a above. They must provide proof of insurance recognized by the German insurance headquarters, not insurance used to register in the country where they are stationed. They will, however, be authorized to operate their POV using their POV drivers license issued from the European command where they are stationed instead of a U.S. Forces Certificate of License issued in Germany. Temporary fuel authorizations are granted in accordance with AE Regulation 600-17 for people on leave, pass, or official travel in Germany. Permanent fuel cards are not authorized for transient POVs.

3-6. PROOF AND TYPES OF OWNERSHIP

a. Proof of Ownership. The following documents are required as proof of ownership, as applicable:

(1) The POV registration or title document. (Foreign documents must be original documents.)

(2) The bill of sale from the seller to the registrant. When purchasing a new POV and the final bill of sale has not been issued, the owner will use AE Form 190-1AJ.

(3) A valid purchase order. If the registered POV has not been delivered, AE Form 190-1AC will be completed by the registrant and a representative of the company that sold the vehicle.

(4) A copy of the written authority from the U.S. leasing company to transport a leased vehicle to the new duty station in a foreign land and a copy of the lease agreement specifying the dates for which permission to use the leased vehicle has been granted.

NOTE: When the U.S. registration or stateside title shows a joint or co-owner, the joint or co-owner must also be included on AE Form 190-1AA.

b. Co-Ownership. A co-ownership registration may be issued to two people if at least one of them has a valid U.S. Forces Certificate of License, the vehicle has a valid annual registration, and both individuals—

(1) Are eligible to register with the U.S. Forces.

(2) Transfer one-half interest of the POV to each other.

(3) Complete and sign the personal information on AE Form 190-1AA.

(4) Sign the POV registration, renewal, or transfer. When transferring a co-owned vehicle, both co-owners must be present at the FRS at the time of transfer.

(5) Have been authorized by the lienholder as co-owners (if applicable).

NOTE: Individuals with suspended or revoked U.S. Forces Certificates of License are not authorized a co-ownership registration. These individuals must comply with the requirements in paragraph 2-17c.

c. Joint Ownership. Joint-ownership registrations will be issued only to a sponsor and his or her spouse at their request. At least one of them must be eligible to register a POV (para 3-5). Either may act for the other in any matter concerning the POV within the scope of this publication, except when selling the POV.

(1) Both owners must sign the back of AE Form 190-1A, verified by any FRS personnel.

(2) If either the sponsor or the spouse is absent when a POV is to be transferred, either a notarized bill of sale or a valid POA (accepted only between spouses) is required to enable the spouse who is present at the FRS to complete the transfer.

(3) A person wishing to delete his or her name from joint ownership, but who cannot be at the FRS in person at the time the change is to be effected, must provide the joint owner a notarized statement or a POA. Otherwise, the new registration document (AE Form 190-1A) will include both names. A new insurance card in the name of the person retaining ownership and permission of the lienholder, if applicable, may be required.

d. Transfer of Ownership. Ownership will not be changed or transferred while a vehicle is registered temporarily.

e. Vehicle History Records. The RMV is the only authority authorized to approve and issue vehicle history records to U.S. Forces members, civilians, contractors, and Family members. Individuals may obtain a vehicle history record by contacting the RMV Customer Service Office at military 314-542-2008/2009. Requests will be processed individually by vehicle. Requesters must pay an administrative fee (by check, money order, or credit card), which is not refundable.

3-7. 30-DAY TEMPORARY AND SPECIAL TEMPORARY REGISTRATIONS

a. Temporary registrations will be issued for POVs that must undergo a mechanical inspection. To apply for a temporary registration, the applicant will—

(1) Provide two completed copies of AE Form 190-1AA to the FRS of their assigned duty station.

(2) Meet the requirements in paragraph 3-5 (except for the mechanical inspection).

(3) Report to the FRS of their assigned duty station, which will issue the temporary plates, to finalize the transaction. Temporary plates are issued to enable applicants to complete the mechanical safety inspection and to provide enough time to make repairs that are necessary to pass the safety inspection. Temporary plates must not be used to travel outside of Germany.

b. Temporary registrations are initially valid for 30 calendar days only. During this 30-day period, a POV must pass the mechanical inspection. If the POV fails the inspection for an immediate safety hazard (glossary), it must be registered as nonoperational immediately. If there is no immediate safety hazard during the initial 30-day temporary-registration period, but requisitioned repair parts do not arrive, vehicles that cannot be repaired by the end of the second 30-day temporary-registration period must be registered as nonoperational until repairs can be completed.

c. Cancelled temporary registrations must be registered as nonoperational. An additional registration fee is required for the nonoperational transaction.

d. After a POV passes the mechanical inspection, permanent license plates with the expiration decal attached and POV registration documents will be issued through the FRS.

e. POVs that do not pass the mechanical inspection will be registered as nonoperational. Temporary plates will not be issued more than twice for the same vehicle during a 90-day period. The DES or CSF will determine how long an individual must wait to obtain the next set of temporary license plates. The POV owner's chain of command must give the applicant written approval authorizing a third set of temporary plates. The POV owner must provide documentation of repair to be authorized an additional set of temporary plates.

f. Applicants may be denied operational registration privileges up to 60 calendar days by the DES or CSF if temporary license plates are not returned on the specified date.

g. Ownership of a POV will not be transferred while the POV is temporarily registered.

h. Persons whose driving privileges have been revoked but who are required to move a POV in connection with a PCS move are eligible to apply through the revoking authority for a temporary registration that is valid up to 5 calendar days. The POV owner's chain of command will appoint an individual with a current U.S. Forces Certificate of License to move the vehicle for the owner.

i. Army military personnel applying for a motorcycle license may request a temporary (8 calendar days) registration that will begin 3 workdays before they attend the MSF course. Individuals who do not have a valid country or U.S. State or territory of the United States drivers license for a motorcycle are prohibited from attending an MSF course sponsored by the U.S. Army in Germany. Civilian personnel, contractors, and Family members are not required to attend an MSF course in order to obtain temporary license plates to register their motorcycles and are not authorized to attend Army MSF training courses. Military personnel are not authorized to operate motorcycles registered by their Family members or other members of the Forces unless they have a valid U.S. Forces motorcycle endorsement to their U.S. Forces drivers certificate and a valid MSF card (not older than 5 years) for that type of motorcycle.

j. USAFE/AFAFRICA military personnel applying for a motorcycle license may request a temporary (8 calendar days) registration. This temporary registration period will begin 3 workdays before they attend the MSF course. The installation safety office, SF, and transportation office will develop and publish joint written procedures to be used during the time between the purchase of a two-wheeled vehicle and completion of AFI 91-207 training requirements. Motorcycles of unlicensed riders may be transported or ridden to the Motorcycle-Proficiency Course by a person who is properly licensed. USAFE/AFAFRICA civilian personnel, contractors, and Family members are not required to attend an MSF course in order to obtain temporary license plates to register their motorcycles. Military personnel are not authorized to operate motorcycles registered by their Family members or other members of the Forces unless they have a valid MSF card (not older than 5 years) or until they have completed the MSF course sponsored by USAFE/AFAFRICA.

3-8. NONOPERATIONAL REGISTRATION

a. POVs will be registered as nonoperational when—

(1) The POV does not meet the mechanical standards in appendix C.

(2) The owner's U.S. Forces driving privileges are suspended or revoked for more than 90 calendar days.

(3) The POV registration is canceled (for example, for failure to reregister, lack of third-party liability insurance).

b. To apply for a nonoperational registration using AE Form 190-1AA, the applicant must meet registration requirements in paragraph 3-5a (except for those in subparas (1) and (3)(b)2 and 3). USAG commanders and USAFE/AFAFRICA MSG and LSG commanders may require—

(1) First-time applications for nonoperational registration to be approved by an installation agency (for example, assistant installation coordinator (AIC), DOL).

(2) That the POV be parked in a designated area before the owner can process the application at the local FRS.

c. When an individual's POV driving privilege is suspended or revoked for more than 30 calendar days and the POV must be registered as nonoperational (para 2-17c(3)), the nonoperational registration will be valid for the period of suspension or revocation, but will not exceed 1 year.

d. Nonoperational registrations for standard POVs are valid for 3 months (6 months for recreational vehicles) or, by exception, up to 12 months. Requests for nonoperational registrations for more than 3 months (respectively 6 months) but no more than 12 months require the approval of the USAG commander or the USAFE/AFAFRICA MSG or LSG commander. If a request is approved, the applicant will take a copy of the approved request, AE Form 190-1AA, the license plates, and the prescribed fee to the local FRS. Requests for additional nonoperational registrations must be approved by the USAG commander or the USAFE/AFAFRICA MSG or LSG commander.

e. Vehicles registered as nonoperational may not be operated.

f. To maintain a POV in a nonoperational status, the owner will—

(1) Park the POV in an authorized area (para 4-9b) or private parking off public streets.

(2) Remove the license plates and return them to the local FRS.

(3) Ensure the POV registration is renewed or the POV is properly disposed of before the nonoperational registration expires.

g. POV ownership will not be transferred while the POV is registered as nonoperational unless approved by the USAG commander or the USAFE/AFAFRICA MSG or LSG commander.

3-9. TRANSFERRING A POV TO ANOTHER PERSON ELIGIBLE TO REGISTER A POV WITH THE U.S. FORCES

a. When ownership of a POV is transferred, the buyer and the seller will appear together at the local FRS. When a vehicle has joint or co-owners, both must be present at the FRS along with the buyer. If one of the owners cannot be present, the joint or co-owner conducting the transaction must have a POA or a notarized bill of sale from the absent owner. A valid POV registration (AE Form 190-1A) will be used to transfer ownership and must be signed on the back by both the seller and the buyer. If the POV registration is lost or otherwise not available, the seller must apply for a new AE Form 190-1A before the transfer can be completed. The seller may not transfer a POV if there is a lien on the POV. A clear title, a letter from the lienholder authorizing the sale of the vehicle, or a letter of release from the lending institution is the only acceptable proof that there is no lien. The letter from the lienholder or the lending institution must specify the vehicle's year, make, model, and chassis number.

b. Persons transferring a POV on behalf of another must apply for a POA at the FRS and be listed on AE Form 190-1A as "agent." In situations that require customs clearance before a POV is transferred, AE Form 550-175B will not be issued until AE Form 190-1A is annotated by the FRS as having "no lien," and, when applicable, the POA holder is annotated as an agent. Mechanical inspections that are not older than 75 calendar days for U.S. inspection stations and 30 calendar days for German inspection stations (for example, *TÜV*, *DEKRA*) (para 3-4) are valid to effect the transfer.

c. If the buyer wants the POV to be registered operational at the time of the transfer, he or she must meet the requirements in paragraph 3-5 at the time of the transaction. The license plates will remain on the POV if the buyer is from the same community as the seller. If the buyer is not from the same community, the plates will remain on the vehicle for up to 30 calendar days. The buyer will be issued a 30-day registration and must obtain new license plates from his or her local community FRS by turning in the current plates and submitting an ICC, a completed AE Form 190-1A, and a completed AE Form 190-1AA.

d. If the buyer wants the POV to be registered as nonoperational at the time of the transfer, he or she must meet the requirements in paragraph 3-8b.

3-10. TRANSFERRING OR DISPOSING OF A POV TO PERSONS NOT ELIGIBLE TO REGISTER WITH THE U.S. FORCES

POVs will not be transferred or otherwise disposed of if encumbered by a lien. The registration must be valid in order to transfer the vehicle. The only proof of lien release is a clear title or a letter of release from the lending institution. The letter must specify the vehicle's year, make, model, and chassis number or VIN and must be submitted to the local vehicle registration office to issue a lien-free AE Form 190-1A title before the POV can be sold or transferred outside of the U.S. Forces Vehicle Registration System.

a. A POV will not be transferred or sold while temporarily registered. A vehicle registered as nonoperational may be transferred, donated, or sold without the approval of the USAG commander or the USAFE/AFAFRICA MSG or LSG commander only to a morale, welfare, and recreation (MWR) strip-lot or a DOL. The transfer or sale of such vehicles to a person, vendor, or company not entitled to customs exemption must be performed in compliance with the provisions of AE Regulation 550-175/ CNE-CNA-C6F Instruction 5840.1F/USAFE Instruction 51-702.

b. A POV acquired in or imported into Germany under tax-exempt conditions will not be sold, given, or otherwise disposed of unless customs-clearance requirements are met (AE Reg 550-175/ CNE-CNA-C6F Inst 5840.1F/USAFE Inst 51-702).

c. When a POV is transferred or disposed of, vehicle documents (for example, U.S. title, *Kraftfahrzeugbrief* (German title)) and a copy of the transfer title document of the POV registration (AE Form 190-1A) will be given to the new owner.

d. Once the POV is transferred or disposed of, the U.S. Forces license plates with the decals must be removed and turned in to the local FRS. The owner will also submit the following to the FRS:

(1) A bill of sale or other proof of disposition. (Joint ownership requires approval of both owners.)

(2) The original copy of the POV registration.

(3) The customs clearance document (if applicable).

(4) The lien release.

3-11. RENEWAL REGISTRATION

a. POV registrations must be renewed before they expire. As a courtesy, approximately 75 calendar days before the expiration date, the RMV will send the owner a partially completed AE Form 190-1O as a reminder of the upcoming expiration. Nonreceipt of this reminder in no way relieves the owner of the responsibility to renew the registration.

(1) On receipt of AE Form 190-1AA or AE Form 190-1O, the POV owner will immediately—

(a) Complete the form.

(b) Have the vehicle inspected (app C).

(c) Handcarry the completed AE Form 190-1AA or AE Form 190-1O and the registration fee to his or her assigned FRS. Applications for renewal must include other applicable documentation (for example, a new ICC, lien release).

(2) POV registrations are not valid after they expire and unregistered POVs may not be driven. The fuel card will also be canceled. Registrations may, however, be renewed within 30 calendar days after they expire by completing all renewal requirements, without having to change the license plates on the POV. Requirements include a valid inspection, payment of a late fee, and the normal renewal fee. The original plates will be renewed and remain on the POV. However, the fuel card will expire on the original expiration date and the owner must obtain a new fuel card with the renewed POV registration.

(3) If a POV registration has been expired for more than 30 calendar days, the license plates must be removed from the POV and the owner must register the POV as nonoperational, obtain a new ICC, apply for temporary plates, take the POV through an inspection, and obtain new plates and registration.

(4) Military and civilian personnel on operational deployments to designated hostile-fire areas may place their POVs in Government-approved storage and have their POV registrations suspended for the period of deployment. The time that is remaining on the registration at the time of deployment will be credited to the registration on the individual's return. POVs that will be driven while the owner is deployed are not authorized operational extensions and must continue to be registered, insured, and inspected when required.

b. Applicants may obtain nonoperational registrations by submitting the following to their assigned community FRS:

(1) A written approval according to paragraph 3-8d.

(2) A signed AE Form 190-1AA.

(3) Current registration fee.

c. Deployed U.S. Forces personnel (verified with deployment orders) may add a non-Family member as an additional driver to their vehicle registration for the purpose of vehicle care using a special POA. The person added as an additional driver must be a member of the U.S. Forces with full logistic support. The deployed person will provide the additional driver the old registration, deployment orders, and a copy of the POA. The additional driver must pay the fee for replacement documents to show his or her name.

3-12. REQUIREMENT TO PROVIDE PROOF OF CONTINUING INSURANCE

a. The ICC is the only acceptable proof of third-party liability insurance for registration under this publication unless the insurance company has agreed to use other notification procedures established by the RMV. Once an ICC is submitted with AE Form 190-1AA, no further proof of insurance is necessary unless coverage is canceled by the insurance company or a license plate change has occurred. Whenever coverage is canceled, the owner must submit a new ICC and meet the requirements in paragraph 3-5a(3)(b)3. The issue date of the ICC will be used to determine whether or not the card has expired.

b. Under German law, insurance companies must notify the RMV when coverage for any POV expires or is canceled for any reason (for example, failure to pay premium, failure to renew policy, change of insurance companies). On receipt of a cancellation notice, the RMV will check its records to determine whether or not the POV owner has already submitted a new ICC or deregistered the vehicle (para 3-13).

c. If the RMV receives a notice of cancellation and the POV owner has not submitted a new ICC or deregistered the vehicle, the RMV will notify the owner in writing of the requirement to provide a valid ICC within a specified timeframe. If a new ICC is not received by the date specified, the RMV will cancel the POV registration and notify the owner's commander or supervisor. The MP or SF will immediately remove the POV license plates to ensure the POV is not operated on or after the date specified by the RMV until the POV is properly registered (para 3-5). Nonreceipt of the notification in no way relieves the POV owner of the responsibility to reregister the vehicle.

d. Transactions between a POV owner and an insurance company are private business matters. The RMV will not be liable or responsible for any situation caused by an alleged act or omission on the part of an insurance company (for example, failure to provide an ICC, change of policy number, cancellation of insurance without notifying the POV owner).

3-13. REQUIREMENT TO REPORT CHANGES IN REGISTRATION INFORMATION

a. POV owners will immediately report any change in registration information (for example, lien information, vehicle information, new insurance company, name or unit address change). To report lien, vehicle, or personal information changes, owners will complete AE Form 190-1AA and take it to the FRS for processing with documented proof of the change and a copy of the current registration.

b. If reporting a name change, the owner will submit an ICC showing the new name.

c. If reporting a change in insurance, the owner will do one of the following:

(1) Follow the procedures in subparagraph a above and submit a new ICC.

(2) Send only the new ICC to HQ USAREUR Vehicle Registry, Unit 29230, APO AE 09136-9230, or through German mail (*Bundespost*) to Amerikanische Zulassungsstelle (Insurance Section), Postfach 1263, D-67673 Enkenbach-Alsenborn. ICCs submitted to update the registration file are subject to the requirements in paragraph 3-5a(3)(b)3.

d. No fee is charged for issuing amended registration documents as long as the current registration document is turned in to the local registration office (FRS).

e. When an individual who has U.S. Forces-issued German license plates transfers to a new duty station within Germany, he or she must obtain new license plates that have the new duty station area prefix for the POV within 30 calendar days. When the plates are changed, the FRS clerk will send the old plates to the RMV. Each time new license plates are issued, a new ICC must be submitted.

(1) If the registration is valid for more than 1 year, the license plates and registration are issued free, with the same expiration date.

(2) If the registration is valid for less than 1 year, the applicant may do either of the following:

(a) Pay the current registration fee and obtain new license plates and registration with the original expiration date.

(b) Take the POV to the safety inspection station to have an inspection performed. If the POV passes the safety inspection, the applicant will obtain license plates and registration for 1 year (or more if the POV is less than 10 model years old) and pay the current registration fee.

(3) Vehicles with 60 calendar days or less remaining on the registration must go through a safety inspection before new license plates may be issued.

f. Local FRSs can issue license plates and process transactions for plates assigned only to their communities. Persons who, by exception, have been granted authority to retain plates that are not assigned to their community FRS must process all transactions at the USAREUR RMV in Sembach, Germany. Safety inspections, however, may be performed at any inspection station.

3-14. INLAND MOVEMENT AND COMMERCIALLY SHIPPED POVs

a. Inland POV Movement.

(1) On notification of POV arrival, owners will provide the following documents to the local FRS:

(a) A valid U.S. Forces Certificate of License.

(b) A valid ICC.

(c) A vehicle-condition report.

(d) DD Form 1173, AE Form 600-700A, or a valid DOD ID card.

(e) AE Form 190-1AA.

(f) Proof of ownership.

(2) After providing the documents in (1) above to the FRS, owners will obtain 30-day temporary plates at the local FRS. Paragraph 3-7 provides instructions for 30-day registrations. POVs will not leave the delivery site without temporary or permanent U.S. Forces-provided license plates properly attached to the POV.

(3) Owners without a valid U.S. Forces Certificate of License will register their POVs as nonoperational. If community policy will not allow an owner to leave his or her POV at the delivery site, the owner will obtain the required liability insurance and temporary license plates that are valid for 1 day (that is, they must be returned on the same day they were issued) and provide a driver who is licensed by the U.S. Forces and appointed by the owner's chain of command to move the POV to an approved site. This approval will be attached to the application. When 1-day plates are returned, the registration clerk will provide copies of the nonoperational registration to the owner.

b. Government or Commercial Shipment of POVs (Bremerhaven and Other European Ports).

(1) Oversized POVs and second POVs shipped at Government expense can be picked up at the port after the owner has obtained 30-day plates from the local FRS (a(2) above). The owner must have the POV inspected immediately on return to the duty station and provide the FRS the items listed in a(1)(a) through (f) above.

(2) Commercially shipped POVs may be picked up at the port after the owner has obtained 30-day plates from the local FRS. The owner must have the POV inspected immediately on return to the duty station and provide items in subparagraph a above to the FRS. Customs clearance must be completed by the owner with German customs authorities; shipping and transportation companies are not authorized to effect customs clearance (AE Reg 550-175/CNE-CNA-C6F Inst 5840.1F/ USAFE Inst 51-702 and AE Reg 600-700).

3-15. REPORTING LOST, STOLEN, OR RECOVERED VEHICLES AND LICENSE PLATES

a. If any vehicle registered or licensed by the RMV is stolen or one or both of the license plates are lost, stolen, or recovered, the owner must make an immediate report to the nearest MP or SF station. If the station is not within a reasonable distance, the local civilian authorities will be notified. The MP or SF must be notified as soon afterwards as possible.

b. The MP and SF will act on these reports as indicated in appendix K.

3-16. REPLACING LOST, STOLEN, OR MUTILATED LICENSE PLATES, DOCUMENTS, OR DECALS

a. If one or both plates are lost or stolen, the owner must—

(1) Report the theft (para 3-15).

(2) Complete AE Form 190-1AA and submit it to the local FRS.

(3) Return the POV registration and license plate (if any) to the local FRS.

(4) Pay the current registration fee (by check, money order, or credit card). The owner will receive new permanent plates and registration documents that are valid for the remainder of the registration period or, with a new safety inspection, for 1 year. Vehicles less than 10 years old may be registered for 2 years with a new safety inspection.

NOTE: Vehicles with 60 calendar days or less remaining on their registration must pass a safety inspection before new plates and registration documents may be issued (paras 3-7 and 3-8).

b. If one or both plates are mutilated, the procedures in a(2) through (4) above apply.

c. If documents are lost, stolen, or mutilated, the procedures in a(2) and (4) above apply.

d. If the environmental decal is lost, destroyed, or mutilated because of windshield damage, the applicant must pay the prescribed replacement fee to receive a new one.

e. Any time German license plates are not turned in for any reason, the POV owner will be required to reimburse the USAREUR Registration Fund for the license plates. The owner will be required to follow procedures in paragraph 3-15. The owner will not be entitled to a refund if the lost or stolen license plates are turned in later to the USAREUR RMV or an FRS.

f. The POV owner must pay a fee for replacing AE Form 190-1S.

3-17. POV REGISTRATION CERTIFICATES
The two types of POV registration certificates are as follows:

a. AE Form 190-1A.

(1) AE Form 190-1A is a three-part form issued for permanent operational and nonoperational registrations. Two copies of this form will be given to the customer and the third copy marked “RMV Copy” will be retained for inclusion with the daily transaction documents that are forwarded to the USAREUR RMV at Sembach Kaserne.

(2) AE Form 190-1A is proof of vehicle ownership and provides authorization for POL rations for 1, 2, or 3 years, based on the number of years for which the vehicle is registered. Authorized POL rations are based on the provisions of the Forces Customs Law and provided in AE Regulation 600-17. AAFES gas cards, however, have an expiration date printed on the bottom.

(3) A copy of the POV registration must be in the POV while it is being operated. Any part may be used for proof of registration during reinspection.

(4) If the POV is not operational, it must be registered as nonoperational. The installation nonoperational storage facility may require owners of POVs registered as nonoperational to provide a copy of the registration. The U.S. Forces German license plates must be returned to the FRS when registering the vehicle as nonoperational.

(5) The POV registration or title document will be used to transfer ownership. Nonoperational POVs must be registered as operational before they can be transferred unless approved by the USAG commander or the USAFE/AFRICA MSG or LSG commander for transfer under nonoperational conditions.

(6) The RMV is the only authority designated to approve and issue duplicate USAREUR registrations to U.S. Forces military personnel, civilians, contractors, and Family members for vehicles that are to be deregistered and shipped out of Germany. Individuals may obtain a duplicate registration by contacting the RMV Customer Service Office at military 314-542-2008/2009. Requests will be processed individually by vehicle. Requesters must pay an administrative fee (by check, money order, or credit card), which is not refundable.

b. AE Form 190-1A for Leased Vehicles.

(1) AE Form 190-1A will be used to register leased vehicles. Leased vehicles can be registered for only 1 year at a time; they may not be registered for less than 1 year.

(2) AE Form 190-1A permits individuals to obtain POL authorization for leased vehicles.

(3) Customers will provide the local FRS a valid ID card and U.S. Forces Certificate of License, copies of the original leasing contract in the name of the ID-card owner or Family member authorized logistic support, a German registration form, and the registration fee.

(4) The local FRS must verify logistic support and all required documents before sending them to the RMV for processing.

3-18. ISSUING AND DISPLAYING LICENSE PLATES

a. Issuance.

(1) License plates are issued by the customer's per-duty assigned community FRS.

(2 FRSs will issue two long German license plates for all U.S. Forces-registered POVs (except motorcycles and trailers). These plates will not be bent or altered to fit the POV. The use of short plates violates the agreement between the United States and Germany and will not be approved except for vehicles that, by construction, will not take long plates. The inspector at the POV inspection station must note this requirement on the POV inspection form.

(3) To request one short front plate or two short plates, POV owners must contact the Director, BMD, 405th AFSB. To be issued two short plates or a short plate for the front of the POV, POV owners must submit a request for an exception to policy in writing to the Director, BMD, at 405th Army Field Support Brigade, BASOPS Maintenance Division, Unit 28132, APO AE 09114-8132, or the RMV. The request must include pictures of the vehicle for both the front and back license-plate holders or areas justifying the need; the vehicle identification number (VIN), make, and model; and a completed AE Form 190-1AA documenting mechanical inspection. The request must be sent by e-mail to *usarmy.bavaria.405-afsb.list.maintenance-div-pov-management@mail.mil*. The BMD, 405th AFSB, will make recommendations for correct plate sizes and process short license plates. Where necessary, the RMV will make the final determination on what plate sizes will be issued.

(4) A third license plate without decals may be issued on a case-by-case basis for POVs with bicycle racks when the rack obscures the vehicle's rear license plate. A POV application (AE Form 190-1AA) must be completed and the appropriate fee must be paid before the third plate is manufactured and issued. The third plate may not be used for any other purpose except for placement on a bicycle rack.

(5) The transfer of license plates to other POVs is prohibited. License plates are issued only for the vehicle specified on the registration certificate. Personnel will not transfer or allow to be transferred or otherwise dispose of license plates other than as prescribed in this publication.

b. Display.

(1) License plates will be attached horizontally to the front and rear of the POV at the location prescribed by the manufacturer and the law so that both plates are clearly visible. Brackets designed to mount the U.S.-style plate on the front of the vehicle will be removed before mounting the long German license plate. The rear plate will be centered under a light or placed between lights on either side. (Motorcycles and trailers will display one plate attached horizontally to the rear.)

(2) License plates will be attached firmly to the POV using bolts, screws, mounts, or brackets. Use of string or wire to secure license plates is prohibited.

(3) Drilling holes through the face of license plates for attachment is authorized as long as the license-plate letters and numbers are not obstructed.

(4) POVs will not be operated with license plates obscured by mutilation, dirt, or grime except for short periods (for example, after a traffic accident or during bad weather).

(5) Attaching old license plates or signs to U.S. Forces-provided license plates is not authorized.

(6) Owners who operate a POV displaying license plates that are covered (for example, with plastic or glass), canceled, altered, defaced, forged, or not clearly visible and properly secured are subject to—

(a) Removal of the license plates by commanders, MP, or SF.

(b) Reregistering the POV according to paragraph 3-5.

NOTE: Improper mounting of license plates will result in cancellation of the vehicle registration and the vehicle fuel-ration card.

3-19. REGISTRATION DECALS

Displaying unauthorized decals, stickers, or banners on U.S. Forces-registered POVs may result in cancellation of the vehicle registration, failure of the mechanical inspection, or both. U.S. installation and DOD decals must be removed before registering the vehicle in Germany. Only the following decals may be displayed:

a. *TÜV* and Safety Inspection Expiration Decal. An expiration decal will be issued with initial and renewal registrations. This decal shows the month and year the permanent POV registration expires and must be placed on the rear license plate. Only the most recent inspection decal may be shown on the POV.

b. International Decal. U.S. Forces POVs with German license plates issued by the U.S. Forces will use the “D” international decal. No other international decal is permitted on a U.S. Forces-registered POV.

c. Environmental Decal. German authorities have established environmental zones and environmental-protection zones that prohibit motor vehicles from being driven in them without a decal certifying that the vehicle is manufactured to a standard that makes its emissions acceptable to drive in those areas. The environmental decal must be displayed on the lower right side of the windshield (opposite side from the driver). Paragraph C-31 provides more information about this decal.

d. Handicap Parking Card. A handicap parking card may be displayed when authorized by appropriate officials. If approved, the handicap parking card must be hung on the rearview mirror with the silhouette of the handicap symbol facing forward. The handicap parking card will be issued once the authorized individual provides the RMV an approved copy of AE Form 190-1AW (signed by a German doctor or a doctor assigned to a facility under the Regional Health Command Europe (RHC-E)) and two passport-sized pictures of him- or herself. No fee will be charged for this initial service. A service fee will, however, be charged for replacement cards (for example, if the initial card was lost or mutilated). The individual can either provide this documentation to the local FRS or send it directly to the RMV for processing. The handicap parking card will be valid for use only on U.S. military installations and facilities in the RHC-E AOR and only for the eligibility dates indicated on the card. A permanent handicap parking card will be valid for a maximum of 4 years from the date of issue. Using DOD handicap cards off military installations in Europe is not authorized. Individuals desiring handicap cards for use off military installations must request those through German local city halls (*Rathäuser*).

e. European Highway Toll-Fee (*Maut*) Decal. This decal is issued to show proof of having paid to operate a POV on a specific European country's roadways. This decal must be placed on the windshield as indicated by the specific country.

3-20. REPOSSESSION OF POVs BY LIENHOLDERS

a. Lienholders who are eligible to register POVs with the RMV will do so immediately after repossessing a POV. They must provide a copy of the repossession letter, turn in the license plates, and transfer the vehicle in their name.

b. Lienholders who are not eligible to register POVs with the RMV are responsible for complying with applicable German laws. When a U.S. Forces-registered POV is repossessed on a U.S. facility, the responsible U.S. authority will ensure that the license plates and all U.S. Forces decals are removed and turned in to the local FRS, MP station, or SF station along with a copy of the repossession authorization and that the POV is properly deregistered from the U.S. Forces system.

3-21. PROCEDURES FOR CLEARING A POV

a. The following procedures apply to POVs that are shipped or transported from Germany or moved between communities in Germany when individuals are reassigned:

(1) U.S. Forces-issued German license plates must be turned in to the FRS before shipping or transferring a POV out of Germany. When the German license plates are turned in, U.S. Forces POV license plates that are valid for no more than 90 calendar days will be issued. The registration must be valid during the period for which the license plates are issued. If the registration has less than 90 calendar days remaining, registration fees will be charged. Shipping plates are issued no earlier than 7 calendar days before shipping or driving out of Germany. Proof of shipping or PCS orders (when driving) are required. This also applies to owner–agent transactions. Registrants who ship their POVs out of country with U.S. Forces-issued German license plates will be required to reimburse the RMV for the current cost of new license plates to clear the local FRS.

(2) Local FRSs will issue POV owners AE Form 190-1S for each POV to be shipped or otherwise removed from Germany. The FRS will verify the documents provided by the POV owner; process AE Form 190-1S; sign, date, and stamp the form; and send the third copy along with the vehicle shipping documents to the RMV for processing.

(3) Personnel being reassigned within Germany must turn in AE Form 190-1A and their current license plates and obtain new German license plates from their assigned community FRS at their new duty station within 30 calendar days after reassignment.

b. The following procedures apply to POVs disposed of by other methods (para 4-11):

(1) The local FRS will issue the owner AE Form 190-1S to be completed for each POV. The FRS will verify the information provided by the POV owner, complete the form, and give two completed copies of the form to the POV owner for insurance cancellation. The FRS will send the third copy of the form and corresponding documents to the RMV for processing.

(2) If a POV is to be transferred or sold to a person or vendor in Germany who has no SOFA status (AE Reg 600-700) and is, therefore, not entitled to customs exemption, the transaction must be processed through the U.S. Army Customs Agency–Europe and approved by German customs authorities for payment of taxes or duties by the buyer. Once the POV has been customs cleared, the U.S. Forces member or Family member must take a copy of the customs document, the license plates, the bill of sale, and the lien release (if applicable) to the FRS to properly clear the POV.

NOTE: The RMV is the only authority authorized to approve and issue vehicle history records for all vehicles that are deregistered (*Abmeldebestätigung*) to U.S. Forces military personnel, civilians, contractors, and Family members. Individuals may obtain a vehicle history record by contacting the RMV Customer Service Office at military 314-542-2008/2009. Requests will be processed individually by vehicle. Requesters must pay an administrative fee (by check, money order, or credit card), which is not refundable.

(3) If a POV was sold to a person with SOFA status, the seller will process the transfer with the buyer at the FRS.

(4) If a POV was donated to the local MWR fund, the donor will provide a copy of AE Form 190-1Z to the local FRS to prove the donation.

(5) In the case of an abandoned vehicle (glossary), the responsible USAG commander or USAFE/AFAFRICA MSG or LSG commander who has completed abandoned-vehicle procedures for a POV, including customs clearance in coordination with U.S. Forces Customs Europe officials, must provide disposition documents to the local FRS to dispose of and remove the POV from the U.S. Forces registration system.

(6) In all cases, all license plates must be turned in before a POV is disposed of or sold to persons or vendors who do not have NATO SOFA status.

NOTE: If a duplicate AE Form 190-1S is required (for example, if the original was lost), the requester must pay a service fee.

3-22. DISPOSITION BY AN AGENT

a. If an owner is unable to dispose of a POV before departing, the individual's unit commander will appoint an agent to dispose of the vehicle. The agent must be at least one grade above the POV owner. The agent will be granted special POA (AE Form 190-1AD), which will be valid for 90 calendar days. The current POV registration must be valid for at least 90 calendar days in order for the agent to be added. If the registration is valid for less than 90 calendar days, the owner must have the POV inspected, renew the registration, and pay the current registration fee before the agent may be added to the registration. A copy of the agent's appointment orders will be attached to the agent–owner registration. No additional drivers may be added to the agent–owner registration. The registration is valid only for the agent to ship, sell, or otherwise dispose of the vehicle.

b. Only AE Form 190-1AD, witnessed and dated at the FRS or the local staff judge advocate (SJA) office, is an acceptable POA. A person may be an agent for only one POV at a time. The use of an agent in no way relieves the owner of the responsibility to ensure proper disposition of his or her POV. The POV owner's insurance must remain in force until the vehicle is properly disposed of in accordance with this publication. If the POV is registered with joint ownership, permission from both owners is required before an agent may be appointed.

c. A POA is granted when both the owner and the agent appear at the FRS or the local SJA office and complete AE Form 190-1AD in the presence of the station clerk. The clerk will verify the identities of both the sponsor owner and the agent and ensure both are eligible to register a POV with the RMV. The agent must also be a sponsor and must read and sign AE Form 190-1AF.

d. If the owner is clearing, the owner and the agent must complete AE Form 190-1AA. The FRS clerk will then issue a POV registration that will be valid for 90 calendar days. AE Form 190-1AA must include personal information of both the owner and the agent and the name and address of the lienholder if the POV is encumbered by a lien. During the 90-day appointment, the agent must ship, transfer, or otherwise properly dispose of the POV. The 90-day owner–agent registration will not be extended. The agent must properly dispose of the POV before he or she outprocesses and departs.

e. If the requirements in subparagraph d above have not been met before the expiration of the 90-day period, the agent will register the POV in his or her name. If the POV is registered as operational, the agent will submit an ICC in his or her name. If there is a lien on the POV, the agent must obtain a lien release from the lienholder before registering the POV solely in his or her name.

3-23. WITHDRAWAL OF REGISTRATION PRIVILEGES

a. Operational registration privileges may be suspended for a period of at least 30 calendar days, but not to exceed 180 calendar days, if the owner does one of the following:

(1) Fails to register or reregister a POV 30 calendar days or more after the registration expires.

(2) Operates a POV that does not meet mechanical standards (app C).

(3) Operates a POV without insurance. The Vehicle Registry Information Network (VERINET) provides the latest valid insurance status.

(4) Abandons a POV.

(5) Alters license plates or fails to secure them properly (paras 3-18b(2) and (6)).

(6) Fails to submit payment within the time specified.

(7) Refuses to remove or cover indecent or obscene bumper stickers, signs, writing, or graphic depictions on a POV (para 3-26).

(8) Transfers license plates to another POV.

b. Suspending authorities acting in accordance with this paragraph will notify the DES or CSF of suspensions.

c. Owners may appeal suspensions of registration privileges to the appellate authority if they believe the suspending authority has acted unjustly. The decision of the appellate authority will be final.

3-24. REGISTRATION OF VEHICLES USED EXCLUSIVELY FOR RACING EVENTS AND OFFROAD RECREATIONAL VEHICLES

a. POVs used exclusively for racing events and offroad recreational vehicles must be registered. Registration requirements are the same as those for POV registration (para 3-5) except that—

(1) The completed AE Form 190-1AA and a written request must be sent through the chain of command for USAG commander or USAFE/AFAFRICA MSG or LSG commander approval. AE Form 190-1AA requires USAG commander or USAFE/AFAFRICA MSG or LSG commander approval regardless of the applicant's grade.

(2) Proof of insurance or mechanical inspection is not required. However, the racing or offroad site's third-party liability insurance must be valid for a POV or offroad recreational vehicle before the owner or operator may use the vehicle in an event at the racing or offroad site.

(3) Neither license plates nor decals will be issued since racing and offroad recreational vehicles may not be operated or towed on public roads. They must be transported to and from racing and offroad sites on a trailer.

b. Owners will comply with the requirements of German law and local racing-club regulations. This includes provisions concerning third-party liability insurance and mechanical standards. No racing or offroad recreational vehicles will be operated on public roads or in fields and woods unless specifically authorized by German authorities.

c. AE Form 190-1A issued by the RMV will be overstamped with "Racing Vehicle" (for both racing and offroad recreational vehicles) and be valid for 1 year.

3-25. LOSS OF ELIGIBILITY

a. Individuals who have retired, are discharged, are placed on a theater-wide bar, or have terminated military or civilian service lose their eligibility for U.S. Forces POV registration at 0001 hours on the day after the effective date of the respective action.

b. Personnel may register their POVs with German authorities after losing their eligibility for U.S. Forces registration. To do so, some German states (*Länder*) require a letter of history or an authorization letter for the POV, which will be issued by the RMV. A service fee must be paid to obtain either letter. Some German cities will not accept history and authorization letters. Individuals should therefore check with the local German authorities to ensure they will accept either letter before requesting issuance. Service fees will not be refunded once a letter has been issued. Personnel who have been separated for cause or misconduct, placed on a theater-wide bar, or discharged under other than honorable conditions are not eligible for a license history letter.

c. Family members who remain in Germany after the rotation or death of the sponsor retain eligibility for POV registration for 90 calendar days after the sponsor's report date or death (AE Reg 550-175/CNE-CNA-C6F Inst 5840.1F/USAFE Inst 51-702 and AE Reg 600-700). Unaccompanied Family members who remain in Germany after their sponsor's departure for a PCS will receive full logistic support for 90 calendar days after the sponsor's report date. These Family members may register with German authorities during this 90-day period or must provide proof of proper disposition of the POV.

d. Military personnel in Germany who are retiring from the U.S. Forces and taking terminal leave in Germany until their retirement date and who want to continue to operate their POV with their current U.S. Forces license plates must—

(1) Request a new registration that will be valid up to the day before retirement.

(2) Return the U.S. Forces license plates on the date the registration expires and deregister the POV.

3-26. RESTRICTIONS ON DISPLAYING WRITTEN OR GRAPHIC MATERIAL ON POVs

a. U.S. Forces-registered POVs (including those registered as nonoperational) displaying indecent or obscene bumper stickers, license plates, signs, writing, or graphic depictions of any sort will not be permitted on any area under the control of U.S. Forces that has any of the following:

(1) AAFES or other personal or private business or retail-sales facilities.

(2) Athletic facilities.

(3) Childcare facilities.

(4) Commissaries.

(5) Department of Defense Dependents Schools facilities.

(6) Family housing.

(7) Libraries.

(8) Playgrounds.

(9) Recreational facilities.

(10) Theaters.

(11) Youth services facilities.

b. POVs displaying indecent or obscene matter will be denied entry to areas in subparagraph a above until the indecent or obscene matter is removed or covered. Drivers and owners of POVs displaying indecent or obscene matter in the areas in subparagraph a above will be asked to remove or cover the indecent or obscene matter or to move the POV from the area.

c. Drivers and owners of POVs displaying indecent or obscene matter are subject to having their U.S. Forces Certificate of License suspended (para 2-14) if they—

(1) Allow the POV to enter the areas in subparagraph a above after being informed that they are denied entry until the matter is removed or covered.

(2) Fail (after being given the option) to—

(a) Remove or cover indecent or obscene matter on the POV located on the area in subparagraph a above.

(b) Move the POV from the areas in subparagraph a above.

d. The use of decals and material attached to the POV that show connection with the United States (for example, old installation or inspection decals, U.S. patriotic decals, American slogan decals) are prohibited on POVs with U.S. Forces-provided German license plates. Removing these decals will help prevent the POVs from displaying the owner's affiliation with the U.S. Forces in Germany. This policy does not apply to decals and permits prescribed in paragraph 3-19.

e. The use of decals and other material attached to the POV or displayed in windows advertising commercial or home businesses are prohibited. Displaying these types of decals and material on POVs will cause the POV to be rejected at the vehicle safety inspection and, if found later on the vehicle, will cause the registration to be canceled until the owner complies with this requirement.

CHAPTER 4
MISCELLANEOUS PROVISIONS AND REQUIREMENTS

SECTION I
TRAFFIC LAWS AND REGULATIONS

4-1. GENERAL

a. U.S. Forces POV-licensed drivers will comply with German traffic laws and regulations when operating POVs in Germany. Operation of POVs—

(1) In other countries is governed by the laws of those countries.

(2) On U.S.-controlled property in Germany is governed by German traffic laws as well as U.S. regulations and procedures (chap 5).

b. Displaying a nationality decal and providing an international insurance (green) card is mandatory to enter any country. U.S. Forces-registered vehicles with German license plates will not display the USA decal but may show the "D" decal for Germany (para 3-19b).

NOTE: In EU countries, the "D" on the license plate meets the requirement for displaying a nationality decal. For entry into non-EU countries, displaying the nationality decal is strongly recommended to preclude problems with local authorities.

c. Possession of an international drivers license is recommended when traveling to other European countries and is mandatory in some European countries. The international license is not valid in the country where it is issued and must be supported by a valid U.S. Stateside license and a U.S. Forces Certificate of License.

4-2. RESERVED POV PARKING

USAG commanders and USAFE/AFAFRICA MSG or LSG commanders may designate reserved POV parking spaces for specific people or activities. For security reasons, parking by permit number rather than name, grade, or position is strongly recommended.

4-3. POV SECURITY

POV owners will secure their vehicles when they are parked and unattended. Failure to secure a POV may result in a citation from law-enforcement personnel.

4-4. SAFETY-EQUIPMENT REQUIREMENTS FOR GERMANY

German law requires the following safety equipment:

a. Emergency Warning Devices and First-Aid Kits. Appendix C provides requirements for these items.

b. Seatbelts and Restraining Devices That Meet the Following Specifications:

(1) Shoulder belts must cross the shoulder and chest, not the face or neck. Lap belts must be low over the hips, snug, and not twisted.

(2) Infant and child restraining devices (infant car seats) are required in POVs for children between 10 kilograms (kg) (22 lb) and 13 kg (28.6 lb) until they can no longer lie in the infant car seat securely. The infant car seat will be secured in the front passenger seat using the three-point restraining device. Children who are 4 years of age or younger may be secured on backseats with standard seatbelts if, because of securing other children, other restraining devices are not available.

(3) Toddler car seats are required for children between 9 kg (19.8 lb) and 18 kg (39.6 lb) up to approximately 4 years old. Toddler seats must be placed in the back seat of the POV and secured with a three-point restraining device or other child-restraining device. Children who are 4 years of age or younger may be secured (in their toddler seats) on the backseat with standard seatbelts if, because of securing other children, other restraining devices are not available.

(4) Children under 12 years of age and weighing between 15 kg (33 lb) and 36 kg (79.2 lb) who are shorter than 150 centimeters (cm) may travel in POVs only on booster seats for which seatbelts or other restraining devices for children are used that meet the requirements of Article 2, paragraph 1, letter c of Council Directive 91/671/EEC of 16 December 1991 concerning the mandatory use of seatbelts and child-restraining devices in motor vehicles (Official Journal EC No. L 373/26), revised by Article 1, No. 3, of Directive 2003/20/EC of the European Parliament and the Council of 8 April 2003 (Official Journal EU No. L 115/63), and which are suitable for the child. Children weighing between 15 kg (33 lb) and 25 kg (55 lbs) should be placed in high-back booster seats secured with safety restraining devices in the backseat of the POV. Children who are taller than 150 cm (regardless of age) may use three-point restraining devices without booster seats.

(5) Owners of POVs equipped only with two-point seatbelts in the backseats must replace the seatbealts with three-point systems, which must be professionally installed (sec 35a of the *Straßenverkehrs-Zulassungs-Ordnung* (*StVZO*) (German Road Traffic Licensing Regulation)).

c. Motorcycle Helmets and Eye-protection Devices. Motorcycle helmets (glossary) and eye-protection devices are mandatory when operating two-wheeled motorized vehicles, trikes, or four-wheeled ATVs.

d. Protective Equipment for Transporting Children on Bicycles. Persons of at least 16 years of age may transport children up to the age of 7 on bicycles only if special seats are available for the children and if wheel casings or similar protective measures guarantee that the feet of the children cannot be caught in the spokes. Also, persons who are at least 16 years old may transport a maximum of two children up to the age of 7 in trailers designed for the transportation of children behind bicycles. The age limit of 7 years does not apply to the transportation of handicapped children.

NOTE: Transporting people on the loading area or loading space of motor vehicles is prohibited.

4-5. SCHOOLBUSES

Drivers must stop when approaching or following schoolbuses that are stopped to allow passengers to get on or off. This rule applies only on U.S. Forces-controlled property.

4-6. LENDING AND BORROWING POVs

a. If POV owners permit other U.S. Forces POV-licensed drivers or drivers authorized in paragraph 4-10 to operate their POV, the drivers must carry the appropriate registration certificate for that POV.

b. If the POV will be operated outside Germany, the owner must provide the driver written permission and the international insurance (green) card in addition to the POV registration.

4-7. ACTION IN CASE OF AN ACCIDENT

a. Germany has a Good Samaritan Law that requires everyone, in case of an accident or common danger or distress, to render the appropriate aid expected under the circumstances. Failure to render aid can result in a fine or imprisonment.

b. POV drivers will immediately notify the MP or SF of accidents on U.S. installations. If the accident occurs off a U.S. installation, drivers will—

(1) Notify the German police immediately. German police may, however, not respond to accidents if no injuries are involved.

(2) Report the accident to the MP or SF within 72 hours. This will help drivers if they have to appear in court and when insurance companies need information.

c. AE Form 190-1Y explains specific actions to take when involved in an accident. This form is available from the local FRS and should be kept in the POV to be readily available.

SECTION II
PROVISIONS, REQUIREMENTS, AND PROHIBITIONS ON POV OPERATION AND DISPOSAL

4-8. USE OF TAX-FREE POL IN RENTED AND LEASED VEHICLES

Individuals subject to this publication who rent German-registered vehicles are eligible to obtain temporary fuel-ration cards for those vehicles. Authorizations are issued by U.S. Army Customs Agency–Europe field offices (AE Reg 550-175/CNE-CNA-C6F Inst 5840.1F/USAFE Inst 51-702).

4-9. PROHIBITIONS ON UNREGISTERED OR UNLICENSED POVs

a. Persons subject to this publication will not operate or park a POV or permit a POV to be operated or parked on any public highway, in any public area or Family housing area, or on any military installation unless it is properly registered under this publication. Additionally, the operation of pocket bikes (glossary) on public roads and installations is prohibited unless certified by the manufacturer for operation on public roads. Pocket bikes may not be registered or licensed in Germany.

b. POVs with a nonoperational or racing registration must be parked on U.S.-controlled property as designated by the USAG commander or the USAFE/AFAFRICA MSG or LSG commander or on property owned or rented by the POV owner if authorized by the USAG commander or the USAFE/AFAFRICA MSG or LSG commander.

4-10. OPERATION OF U.S. FORCES-REGISTERED POVs BY PERSONS NOT LICENSED UNDER THIS PUBLICATION

a. Operation of a POV registered under this publication by persons not holding a valid U.S. Forces Certificate of License is prohibited except—

(1) By individuals employed as chauffeurs or drivers by persons subject to this publication, provided they have been granted an exception approval by the NATO SOFA Office, Office of the Provost Marshal, HQ USAREUR (AEPM-NS) in coordination with German federal customs authorities. These individuals must have a valid German drivers license, an employment contract, and, if they are non-German citizens, a residence and work permit for Germany.

(2) For short and reasonable periods by garage attendants, driving instructors, testing personnel, and mechanics licensed by German authorities.

(3) By guests of POV owners when both of the following apply:

(a) A U.S. Forces-licensed member of the POV owner's household is present while the vehicle is operated.

(b) The guest or visiting friend or relative who operates the POV has a valid drivers license that is recognized by German authorities and has been issued an authorization to independently use the POV by a U.S. Army Customs Agency–Europe field office (AE Reg 550-175/CNE-CNA-C6F Inst 5840.1F/USAFE Inst 51-702).

(4) By armed-forces members of other Sending States in Germany (for example, Canada, United Kingdom) if these members have a valid license recognized by German authorities. Their use of the POV owner's ration-fuel card is not authorized.

(5) By exception as prescribed in paragraph 2-1b.

b. The independent operation of U.S. Forces-registered POVs by visiting, nondependent Family members and guests is subject to AE Regulation 550-175/CNE-CNA-C6F Instruction 5840.1F/USAFE Instruction 51-702 and AE Reg 600-700. Requests for permission for such visitors to operate a U.S. Forces-registered POV on their own will be presented in person to the appropriate local military customs field office.

c. Visiting spouses of U.S. Forces personnel stationed in Germany who are not command- or agency-sponsored may operate their spouse's U.S. Forces-registered POV for up to 30 calendar days. If the visiting spouse will be in Germany for more than 30 calendar days, he or she must apply for a U.S. Forces Certificate of License.

(1) To apply for AE Form 190-1AP, the spouse who is not command- or agency-sponsored must have a valid country license and an international drivers license.

(2) If the USAREUR PM grants approval, the local military customs office will issue AE Form 190-1AQ to the visiting spouse. The visiting spouse must have this form in his or her possession when operating the sponsor's U.S. Forces-registered POV.

4-11. DISPOSING OF POVs

a. U.S. Forces-registered POVs must be properly disposed of before the owner leaves Germany. Appendix E explains the various ways to properly dispose of POVs and provides NATO SOFA and U.S.–German customs policy and procedures.

b. During initial vehicle registration, registrants must acknowledge the following warning, which is written below block 47 on AE Form 190-1AA:

> *I am aware that AR 190-5/OPNAV 11200.5D/AFI 31-218(1) and the installation traffic code provide for the removal and temporary impoundment of privately owned motor vehicles that are either parked illegally or, for unreasonable periods, interfering with military operations, creating a safety hazard, disabled by accident, left unattended in a restricted or control area, or abandoned. I agree to reimburse the United States for the cost of towing and storage should my motor vehicle, because of such circumstances, be removed and impounded.*

4-12. LOSS OF LOGISTIC SUPPORT

Commanders and supervisors of individuals who have registered POVs with the U.S. Forces must notify the RMV in writing when any of those individuals have obtained logistic support to register their POVs through employment or service in their organization and are reassigned to another country, are terminated (voluntarily or involuntarily) from their duty position, or lose entitlement to logistic support in any manner and do not properly clear through central clearance. This serves as an additional control to protect the Forces from illegal use of tax- and duty-free privileges and protects the U.S. Government from insurance claims for POVs that are being operated in Germany without entitlement and insurance. Notifications may be sent to the USAREUR RMV by mail to USAREUR Registry of Motor Vehicles (AEPM-VR), Unit 29230, APO AE 09136-9230, by fax to military 542-2044 or civilian 0611-143-542-2044, or by e-mail to *usarmy.sembach.usareur.list.rmv-cust-svc@mail.mil.*

4-13. GERMAN LICENSE PLATES

a. German license plates issued to U.S. Forces personnel to be used while stationed in Germany are the property of the U.S. Government. The German License Plates Agreement Statement (fig 4-1) provides information about using these plates. No deviations from the policy on the size of license plates will be granted except for vehicles that, by construction, prevent the long German license plates from being attached. In those cases, the inspector at the POV inspection station must annotate the requirement for one short front plate or two short plates on the POV inspection form. The long German license plates must be used when the vehicle construction allows this.

b. The Director, BMD, 405th AFSB, is the approving authority for one short front plate or two short plates. To be issued two short plates or a short plate for the front of the POV, the POV owner must submit a request for an exception to policy in writing to the Director, BMD, at 405th Army Field Support Brigade, BASOPS Maintenance Division, Unit 28132, APO AE 09114-8132, or the RMV. The request must include pictures of the vehicle for both the front and back license-plate holders or areas and a completed AE Form 190-1AA documenting the mechanical inspection. The BMD, 405th AFSB, will make recommendations for correct plate sizes and process short license plates. Where necessary, the RMV will make the final determination on what plate sizes will be issued.

c. U.S. Forces-issued German license plates must be returned to the local FRS before the POV departs Germany, is transferred to someone who is not a member of the Forces in Germany, is transferred to another location within Germany, or is otherwise disposed of. The FRS will give the owner an AE Form 190-1S after the owner proves that the POV has been properly disposed of. This form will be the owner's proof that the German plates were turned in.

d. All applicants for German license plates will be required to sign the German License Plates Agreement Statement (fig 4-1) before taking possession of the German license plates. By signing the statement, applicants acknowledge that they are aware that if they do not comply with the agreement and return the plates to the local FRS without an approved exception (para 4-14), they will be required to reimburse the vehicle-registry fund for the plates, lose their driving and vehicle-registration privileges, and may have legal actions taken against them.

4-14. EXCEPTIONS TO POLICY

The USAREUR PM, through the Registrar, may grant exceptions to policy in this publication unless prevented from doing so by international agreements or other directives. Requests for exceptions to policy will be sent through command channels to the USAREUR Registry of Motor Vehicles (AEPM-VR), Unit 29230, APO AE 09136-9230.

GERMAN LICENSE PLATES AGREEMENT STATEMENT
(AE Reg 190-1/CNE-CNA-C6F Inst 11240.6Y/USAFE-AFAFRICA Inst 31-202)

German License Plate Number:_____

1. The German license plates with the number listed above are the property of the U.S. Government. They must be returned if I transfer out of Germany or to another location within Germany (permanent change of station), separate from the U.S. Forces, or otherwise lose logistic support as a member of the U.S. Forces. I understand that the German license plates issued to me will remain the property of the U.S. Government and must be returned to the local field registration station (FRS) before I transfer the vehicle to someone without logistic support in Germany, ship the vehicle out of Germany, or otherwise dispose of the vehicle. I also understand that failure to return the license plates to my local FRS will cause me to lose my driving and vehicle-registration privileges and may result in legal actions being taken against me. In addition, I will have to pay the cost for replacing the license plates and the number.

2. These license plates must be attached to the front and rear of the POV so that both plates are clearly visible. (Motorcycles and trailers must display one plate attached to the rear.) Plates must be firmly attached using bolts, screws, or brackets. Drilling or punching of two or more holes for attachment is authorized as long as the numbers and letters are not obstructed. Bending, cutting, or mutilating plates to fit the POV is against German law and U.S. Forces regulations and will result in cancellation of my registration. However, minor bending to conform to the vehicle's contour is permissible as long as the degree of bend does not crease the license plate or distort its appearance.

3. I understand that two long plates will be issued for my POV if the POV is designed to use the long plates. This is not optional; it is required by German law with exceptions only for POVs that, by construction (for example, indented body or bumper), cannot accept a long plate, and only for the front or back when one or the other position will accept the long plate. In this case, one short plate and one long plate will be issued. This will require removal of either the front or rear U.S. license-plate bracket so that the long plate will fit either location. Normally, the short plate will be mounted in the rear, but in a few cases, the short plate may have to be mounted on the front with the long plate mounted on the rear of the POV. On very few POVs, short plates will have to be mounted on the front and rear of the POV. This will be strictly controlled as it violates German law and the agreement the U.S. Forces made with the German Government on using German license plates. Short plates will be issued only with the approval of the 405th Army Field Support Brigade, BASOPS Maintenance Division, Unit 28132, APO AE 09114-8132 (e-mail: *usarmy.bavaria.405-afsb.list.maintenance-div-pov-management@mail.mil*). A photo of the front and rear license plates must be forwarded with the request.

Signature: _____Date: _____

Figure 4-1. German License Plates Agreement Statement—Continued

CHAPTER 5
U.S. FORCES TRAFFIC CODE FOR INSTALLATIONS IN GERMANY

SECTION I
GERMAN TRAFFIC ORDINANCE

5-1. PURPOSE
This chapter regulates activities of drivers and pedestrians on U.S. Forces installations. In general, the German Traffic Ordinance will apply on all U.S. Forces installations in Germany. Selected rules in the German Traffic Ordinance and additional rules thereto applicable on U.S. Forces-controlled installations are explained in paragraphs 5-5 through 5-7 and in AE Miscellaneous Publication 190-1A.

5-2. RESPONSIBILITIES
Commanders will ensure that personnel subject to this publication follow German Traffic Ordinance requirements and prohibitions, which are listed in AE Pamphlet 550-19, appendix E.

5-3. RULES OF THE ROAD AND GENERAL PROVISIONS
The following are explained in the order listed in AE Pamphlet 550-19, appendix E, part I:

a. Basic rules.

b. Use of roads by vehicles.

c. Speed.

d. Distance.

e. Passing.

f. Driving past.

g. Use of traffic lanes by motor vehicles.

h. Right-of-way.

i. Turning, turning around, and backing up.

j. Traffic circle.

k. Entering and pulling away.

l. Special traffic situations.

m. Stopping and parking.

n. Parking-time-monitoring devices.

o. Duty to exercise care when entering and alighting.

p. Vehicles immobilized on the road.

q. Towing of vehicles.

r. Warning signs.

s. Lighting.

t. Autobahns and roads reserved for motor vehicles.

u. Railroad crossings.

v. Public means of transportation and schoolbuses.

w. Transportation of persons.

x. Safety belts, protective helmets.

y. Load.

z. Other duties of the driver of a vehicle.

aa. Specific means of conveyance.

ab. Pedestrians.

ac. Pedestrian crosswalks.

ad. Formations.

ae. Animals.

af. Excessive use of the road.

ag. Environmental protection and prohibition to drive on Sundays.

ah. Sports and games.

ai. Obstructions to traffic.

aj. Impairment of traffic.

ak. Accidents.

al. Special privileges.

5-4. SIGNS AND TRAFFIC INSTALLATIONS

AE Pamphlet 550-19, appendix E, part II, explains the following:

a. Signals and instructions by police officers.

b. Changing and constant light signals and green arrows.

c. Blue and yellow flashing lights.

d. Traffic signs.

e. Danger signs.

f. Regulatory signs.

g. Guiding signs.

h. Traffic installations.

SECTION II
SELECTED TRAFFIC RULES

5-5. MISCELLANEOUS RULES

a. Reckless Driving. Drivers will not operate vehicles in a reckless manner.

b. Driving in Reverse (Improper Backing). Drivers will not drive in reverse unless it is safe to do so and does not interfere with other traffic. Driving in reverse while on an autobahn is strictly prohibited.

c. Obstructing the Driver's View. Drivers will not operate vehicles if cargo or passengers obstruct the driver's view or the driver's control of the vehicle.

d. Maximum Number of Passengers. Vehicles will carry only the number of passengers for whom there are permanently installed seats.

e. Opening Vehicle Doors. Doors of vehicles will be opened only when it is safe and only when it will not interfere with traffic.

f. Securing Loads. Drivers will not move vehicles unless cargo in or on the vehicle is secured and will not shift or fall off or out of the vehicle.

g. Seatbelts and Other Restraining Systems.

(1) Drivers and Passengers of U.S. Government Vehicles and POVs On or Off U.S.-Controlled Property. Drivers and passengers will wear or use available restraining systems when in U.S. Government vehicles and POVs on and off U.S.-controlled property.

(2) Children 12 Years of Age or Younger. Children 12 years of age or younger or shorter than 150 centimeters (4 feet, 11 inches) are required to sit on the backseat and use restraining equipment suitable for the child and approved by either ECE-R 44/03, ECE-R 44/04, or DOT.

h. Buses. German traffic law requires that drivers following a bus must—

(1) Stop (on a two-lane road) when the bus has its left warning signal flashing to indicate that it is about to pull out and merge with traffic.

(2) Slow down to a walking speed (7 kph) when the schoolbus or public bus has both signals flashing and has stopped to allow passengers to enter or exit the bus. German law does not require stopping for schoolbuses on public roads off U.S.-controlled areas. Drivers approaching a schoolbus from either direction in U.S.-controlled areas must stop before reaching the schoolbus if the bus is stopped and children are getting on or off the bus. Drivers will not proceed until the schoolbus proceeds.

(3) Drive carefully (at a reduced but not designated speed) when the bus has its right signal on to indicate that it is about to reach a bus stop.

i. Cell Phones.

(1) The use of handheld cell phones or other devices for verbal communication or text-messaging when driving a vehicle or riding a bicycle is prohibited. Hands-free devices that can be operated without the driver having to take his or her hands off the steering wheel or eyes off the road may be used. Handheld telephones may be used only when the vehicle is stationary and the motor is turned off.

(2) Walkers and joggers may not use cell phones or wear listening devices that impede their hearing or their ability to detect impending danger.

j. Excessive Noise. POV operators will not play their radios or stereos so loudly that they can be heard more than 10 feet from the POV with the windows up or make noise with their motor, exhaust, or tires that is louder than normal use (for example, racing motors, using exhaust systems that are not issued by the POV manufacturer, squealing tires).

k. Maximum Speed.

(1) The maximum speed limit for vehicles in U.S.-controlled areas is 30 kph or as posted.

(2) Changes to the 30-kph limit must be posted prominently in all areas affected by the change.

(3) The maximum speed for passing marching troops (including physical-training formations) is 15 kph.

l. Minimum Speed. Drivers will not drive so slowly that they impede the normal flow of traffic unless conditions indicate a slow speed is necessary.

m. Racing. Except in an officially recognized event approved by an appropriate authority, no one will participate in the following events on U.S.-controlled areas:

(1) Attempts to set a speed record.

(2) Exhibitions of speed or acceleration.

(3) Races.

n. Driver's Responsibilities. The operator of a motor vehicle is responsible for the conduct of all passengers riding in the vehicle while on a military installation. Drivers possessing or allowing passengers to possess open containers of alcoholic beverages while riding in the vehicle will be assessed 1 point to their drivers license when discovered by authorities.

5-6. MOTORCYCLES AND SIMILAR VEHICLES

a. General. A motorcycle operator has the same rights and responsibilities as the driver of any other vehicle subject to this publication. This section prescribes additional guidance unique to operating motorcycles.

b. Motorcycle Safety.

(1) Motorcycle operators will ride only on the permanently attached seat. Operators will not carry another person on a motorcycle unless the motorcycle is designed to carry more than one person. Passengers must ride on the permanent and regular seat (if designed for two persons) or in a sidecar.

(2) Persons riding a motorcycle must sit facing forward with one leg on each side of the motorcycle.

(3) Motorcycle operators will not carry bundles, packages, or other articles that prevent them from keeping both hands on the handlebar.

(4) Motorcycle passengers will not interfere with the operation or control of the motorcycle or the view of the operator.

(5) Motorcycle riders will not attach themselves or the motorcycle to any other vehicle on the road.

(6) Motorcycle operators and passengers will wear—

(a) A helmet properly fastened under the chin. Helmets must meet the standards set by the American National Standards Institute (ANSI), the Snell Standard M2005 according to DOD Instruction (DODI) 6055.04, or the ECE. (The valid ECE standard is the ECE-R 22-series standard; the series can be any number from 01 through (currently) 05).

(b) Eye protection (glossary). Eye protection must meet the Vehicle Equipment Safety Commission Regulation standards or the European equivalent. Eye protection must be impact- or shatter-resistant (goggles, wraparound glasses, or a full-face shield properly attached to the helmet). A windshield, fairing, or eyeglasses alone are not proper eye protection.

(c) Protective clothing. Protective clothing includes clothing required by DODI 6055.04 or the European equivalent. Personnel will wear protective clothing as follows:

1. All personnel (except local national personnel) will wear—

a. Full-fingered gloves or mittens made from leather or other abrasion-resistant material.

b. Over-the-ankle footwear according to DODI 6055.04, enclosure 3, paragraph 6e(4)(c). Footwear should be made of sturdy leather and have a good oil-resistant sole to reduce slipping hazards. Service boots meet this requirement.

c. A long-sleeved shirt or jacket.

d. Full-length trousers.

2. Soldiers assigned to USAREUR will wear a vest, jacket, upper garments, or motorcycle clothing that incorporates fluorescent and highly reflective material when operating or riding as a passenger on a motorcycle, moped, motorbike, ATV, or similar vehicle at all times on or off post. Military uniforms, including Army physical fitness wear that is designed to be reflective, do not meet this criterion.

3. DA civilians, Family members, and contractors will wear fluorescent and reflective outer garments at all times when operating or riding as a passenger on vehicles described in 2 above while on a military installation. For their own personal safety, these personnel are highly encouraged to wear fluorescent and highly reflective outer garments at all times when operating or riding as a passenger on vehicles described in 2 above on public roads.

4. USAFE/AFAFRICA personnel and their Family members will follow provisions in AFI 91-207 and the USAFE/AFAFRICA supplement for the proper wear of all PPE while operating motorcycles on and off installations.

(7) Children under the age of 7 who are passengers on motorcycles are required to ride in a special seat in accordance with German law (*StVZO*, sec 35a, para 9). Additionally, motorcycles must be prepared with some type of equipment that prevents the children's legs and feet from getting caught in the wheel spokes.

c. Motorcycle Operations on Roads With Traffic Lanes. Motorcycle operators—

(1) May use a full lane. Drivers of other vehicles will not deprive motorcycles of a lane.

(2) Will not drive between lanes of traffic or between adjacent lines of vehicles.

(3) Will not travel side-by-side in the same lane.

d. Motorcycles and Other Vehicles With Motorcycle-Type Engines. The following traffic rules apply to motorcycles and other motorized and self-propelled, open, two-wheel, three-wheel, and four-wheel vehicles powered by an engine:

(1) Headlights and taillights must be turned on when the vehicle is in operation.

(2) Each side of the handlebar must have a rearview mirror.

(3) Pocket bikes and similar vehicles will not be registered, licensed, or operated on public roads or on installations in Germany unless certified by manufacturers as legal for highway use.

(4) All military personnel will wear all PPE in b(6)(a) through (c) above when operating a vehicle described in subparagraph d above. DA civilians, Family members, and contractors will wear the PPE in b(6)(a) through (c) above when riding on military installations. All civilian employees (including LN employees), Family members, and contractors are encouraged to wear PPE in subparagraphs b(6)(a) through (c) above for their personal safety and protection.

5-7. BICYCLES AND SKATEBOARDS

a. Riding.

(1) Bicyclists will—

(a) Ride only on a seat attached to the bike.

(b) Carry only the number of people the bicycle is designed and equipped to carry. Passengers must sit in an authorized, attached seat.

(c) Not ride side by side.

(d) Not carry bundles, packages, or other articles that prevent the bicyclist from keeping at least one hand on the handlebar.

(e) Not ride a bicycle while using a cell phone. Bicycle operators will not use cell phones or wear listening devices that impede hearing and the detection of impending danger. Individuals apprehended by German police using a cell phone while riding a bicycle may be fined.

(2) People riding bicycles, scooters, roller skates, sleds, skateboards, or toy vehicles will not attach themselves to other moving vehicles.

(3) All personnel should refrain from operating nonmotorized vehicles while intoxicated. Operating nonmotorized vehicles while intoxicated, including bicycles, electric bicycles, and scooters and Segways capable of a maximum speed of more than 25 kph, may constitute a violation of German law and result in criminal or administrative penalties under German law and administrative penalties under U.S. regulations.

b. Riding Areas. Bicyclists will—

(1) Use paths, sidewalks, or parts of the road marked for bicycle use when available.

(2) Ride as far to the right of the road as possible.

(3) Be careful when passing a stopped vehicle or a vehicle going in the same direction.

c. Safety Equipment.

(1) Bicycles ridden during hours of darkness must have a headlight that emits a white light and a taillight that emits a red light. Bicyclists will wear light-colored clothing or reflective accessories.

(2) Bicycles must have standard brakes that, when applied, safely stop the bicycle.

(3) Bicycle wheels must have two reflectors mounted 180 degrees apart on the spokes. Bicycle pedals must have reflectors designed and placed to be visible from the front and rear of the bicycle during darkness.

(4) Bicycle operators and passengers on U.S. Forces installations must wear an approved helmet properly fastened under the chin. Helmets must meet the standards set by the ANSI or the ECE for bicycle helmets.

NOTE: As an exception, LN personnel are not required to wear a safety helmet when riding a bicycle on U.S. military installations in Germany. It is, however, highly recommended that they do so.

d. Skates and Skateboards.

(1) General. Skaters, skateboarders, and kick-scooter riders will—

(a) Use the right side of paths, trails, and sidewalks or other designated areas.

(b) Not skate or ride skateboards or scooters in traffic.

(c) Yield to pedestrians.

(d) Not carry anyone or ride with more than one person on the board.

(e) Not use cell phones or wear listening devices that impede hearing and the detection of impending danger.

(2) Safety Equipment. Skaters, skateboarders, and kick-scooter riders will wear—

(a) Protective gear according to standards for bicycle helmets (c(4) above).

(b) Kneepads, elbow pads, and wrist guards.

(c) Light-colored clothing or reflective accessories.

5-8. EMERGENCY VEHICLES

a. When an emergency vehicle (glossary) using an audible or visual signal approaches, pedestrians will yield the right of way to the emergency vehicle.

b. Drivers of emergency vehicles must drive with regard to other drivers and pedestrians using the road.

CHAPTER 6
MWR STRIP-LOT SAFETY REQUIREMENTS FOR THE RESALE OF POVs

6-1. PURPOSE
This chapter prescribes procedures that MWR strip-lots must follow when reselling whole POVs. The sale of a POV engine and chassis together is considered the sale of a whole POV.

6-2. APPLICABILITY
This chapter applies to Army and Air Force MWR strip-lots in Germany.

6-3. PROCEDURES FOR RESALE

a. POVs may be resold only at *TÜV*-approved MWR strip-lots. Approved strip-lots must meet strict regulatory conditions, including proper recycling procedures, equipment, storage, and training for the staff.

b. All POVs for resale must be inspected by an MWR-certified mechanic to determine the condition of the brakes, exhaust, drive train, engine, and other safety-related systems. The certified mechanic will determine if the POV may be sold based on the following conditions:

(1) Capability of an average car enthusiast to make repairs.

(2) The estimated cost of repairs compared to the age and value of the POV.

(3) Availability of parts on the market for the year, make, and model of the POV. Problems discovered will be clearly and prominently posted on the POV to inform prospective buyers of the POV's condition.

c. If any of the following applies to the POV, it cannot be sold:

(1) Major damage to 30 percent or more of its outer body panels.

(2) The frame has been altered.

(3) Excessive rust.

(4) More than 25 hours would be needed to repair the POV based on the Mitchell System or All Data Online System.

(5) Fire damage has affected the POV's safety systems.

d. Vehicles sold by the strip-lot will not be released for removal without the buyer showing a valid military ID and a registration (operational or nonoperational) in the name of the buyer.

APPENDIX A
REFERENCES

SECTION I
PUBLICATIONS

Agreement Between the Parties to the North Atlantic Treaty Regarding the Status of Their Forces (NATO SOFA).

Agreement to Supplement the Agreement Between the Parties to the North Atlantic Treaty Regarding the Status of their Forces With Respect to the Foreign Forces Stationed in the Federal Republic of Germany (Supplementary Agreement (SA) to the NATO SOFA)

Agreement on the Implementation of the Customs and Taxation Provisions of the Supplementary Agreement to the NATO Status of Forces Agreement in Favor of a Force or a Civilian Component

Agreement on the Implementation of the Customs and Consumer Tax Provisions of the Supplementary Agreement to the NATO Status of Forces Agreement in Favor of Members of a Force, of a Civilian Component, and Dependents

Law Implementing the Customs and Tax Provisions of the NATO Status of Forces Agreement, the Supplementary Agreement to the NATO Status of Forces Agreement, With Regard to the Foreign Forces stationed in the Federal Republic of Germany and the Protocol and Agreements Pertaining to the International Military Headquarters in Germany (Forces Customs Law)

Agreement Between the Federal Republic of Germany and the United States of America on the Status of Persons on Leave

Administrative Arrangement Concerning the Transformation of the Gas Coupon System into a Fuel Card Program Between the Federal Ministry of Finance Represented by the Customs and Excise Department and the U.S. Forces Represented by the CG USAREUR Customs Executive Agent, HQ USAREUR, 21 October 2009

United Nations Economic Commission for Europe Regulation (ECE-R) 13, Uniform Provisions Concerning the Approval of Vehicles of Categories M, N and O With Regards to Braking (*http://www.unece.org/trans/main/wp29/wp29regs1-20.html*)

ECE-R 22, Uniform Provisions Concerning the Approval of Protective Helmets and Their Visors for Drivers and Passengers of Motor Cycles and Mopeds (*http://www.unece.org/trans/main/wp29/wp29regs21-40.html*)

ECE-R 41, Uniform Provisions Concerning the Approval of Motor Cycles With Regard to Noise (*http://www.unece.org/trans/main/wp29/wp29regs41-60.html*)

ECE-R 44, Uniform Provisions Concerning the Approval of Restraining Devices for Child Occupants of Power-Driven Vehicles (“Child Restraint Systems”) (*http://www.unece.org/trans/main/wp29/wp29regs41-60.html*)

ECE-R 48, Uniform Provisions Concerning the Approval of Vehicles With Regard to the Installation of Lighting and Light-Signaling Devices
(*http://www.unece.org/trans/main/wp29/wp29regs41-60.html*)

ECE-R 51, Uniform Provisions Concerning the Approval of Motor Vehicles Having at Least Four Wheels With Regard to Their Noise Emissions
(*http://www.unece.org/trans/main/wp29/wp29regs41-60.html*)

ECE-R 69, Uniform Provisions Concerning the Approval of Rear Marking Plates for Slow-Moving Vehicles (by Construction) and Their Trailers
(*http://www.unece.org/trans/main/wp29/wp29regs61-80.html*)

ECE-R 70, Uniform Provisions Concerning the Approval of Rear Marking Plates for Heavy and Long Vehicles
(*http://www.unece.org/trans/main/wp29/wp29regs61-80.html*)

ECE-R 104, Uniform Provisions Concerning the Approval of Retro-Reflective Markings for Vehicles of Category M, N and O
(*http://www.unece.org/trans/main/wp29/wp29regs101-120.html*)

[European] Council Directive 91/671/EEC on the Approximation of the Laws of the Member States Relating to Compulsory Use of Safety Belts in Vehicles of Less Than 3,5 Tonnes

Directive 2003/20/EC of the European Parliament and of the Council of 8 April 2003 Amending Council Directive 91/671/EEC on the Approximation of the Laws of the Member States Relating to Compulsory Use of Safety Belts in Vehicles of Less Than 3,5 Tonnes

United States Code, Title 10, Section 2575, Disposition of Unclaimed Property

Code of Federal Regulations (CFR), Title 40, volume 16, part 205, Transportation Equipment Noise Emission Controls

49 CFR, Transportation

Bundesimmissionsschutzgesetz (German Environmental Emissions Law)

Manual for Courts-Martial

Uniform Code of Military Justice

DOD Instruction 6055.04, DOD Traffic Safety Program

DOD 4160.21-M, Defense Materiel Disposition Manual

AR 25-400-2, The Army Records Information Management System (ARIMS)

AR 27-10, Military Justice

AR 190-5/OPNAV 11200.5D/AFI 31-218(I), Motor Vehicle Traffic Supervision

AR 215-1, Military Morale, Welfare, and Recreation Programs and Nonappropriated Fund Instrumentalities

AR 385-10, The Army Safety Program

AR 600-8-19, Enlisted Promotions and Reductions

AR 600-37, Unfavorable Information

AR 601-280, Army Retention Program

AR 635-200, Active Duty Enlisted Administrative Separations

Air Force Instruction (AFI) 31-218IP, Motor Vehicle Traffic Supervision

AFI 33-360, Publications and Forms Management

AFI 91-207, The US Air Force Traffic Safety Program

Air Force Manual 33-363, Management of Records

Air Force Policy Directive 31-1, Integrated Defense

USEUCOM Directive 45-7, Country Regulations

AE Regulation 210-70, On-Post Commercial Solicitation

AE Regulation 550-175/CNE-CNA-C6F Instruction 5840.1F/USAFE Instruction 51-702, U.S. Forces Customs Controls in Germany

AE Regulation 600-1, Regulated Activities in Europe

AE Regulation 600-17, Retail Sales of Motor Fuel to Individuals in Germany

AE Regulation 600-55, Driver- and Operator-Standardization Program

AE Regulation 600-700, Identification Cards and Individual Logistic Support

AE Pamphlet 550-19, Compilation of Selected German Laws

USAFE Instruction 36-3001, Issue and Control of USAFE Identification (ID) Cards (*http://www.e-publishing.af.mil/shared/media/epubs/USAFEI36-3001.pdf*)

SECTION II
FORMS

OF 346, U.S. Government Motor Vehicle Operator's Identification Card

DD Form 788, Private Vehicle Shipping Document for Automobile

DD Form 1173, Uniformed Services Identification and Privilege Card

DD Form 1920, Alcohol Incident Report

DD Form 2504, Abandoned Vehicle Notice

DD Form 2764, United States DOD/Uniformed Services Civilian Geneva Convention Identification Card

DA Form 2062, Hand Receipt/Annex Number

DA Form 3626, Vehicle Registration/Driver Record

DA Form 3946, Military Police Traffic Accident Report

DA Form 3975, Military Police Report

DA Form 4833, Commander's Report of Disciplinary or Administrative Action

Air Force Form 2293, US Air Force Motor Vehicle Operator Identification Card

AE Form 550-175A, Import/Export Certificate and Purchase Permit/*Einfuhr-/Ausfuhrgenehmigung und Erwerbsgenehmigung*

NOTE: Appendix B lists AE forms prescribed by this publication.

APPENDIX B
PRESCRIBED FORMS AND PUBLICATIONS

Table B-1 lists forms and publications prescribed by this publication. Source codes are explained at the end of this appendix.

Table B-1
Prescribed Forms and Publications

Item	*Source Code	Title
AE Form 190-1A	V	U.S. Forces POV Registration/Title/POL Authorization/ *Zulassungsschein/Besitzurkunde für Privatkraftfahrzeuge*
AE Form 190-1F	V	U.S. Forces Certificate of License/The United States Forces in Germany
AE Form 190-1G	Y	Temporary U.S. Forces Certificate of License/ *Provisorischer Führerschein*
AE Form 190-1H	R	Vehicle Mechanical Safety Inspection Record/*Inspektionsbericht über die mechanische Sicherheit eines Fahrzeugs*
AE Form 190-1I	R	Vehicle Mechanical Safety Inspection Record (Motorized Two-Wheeled Vehicle)/*Inspektionsbericht über die mechanische Sicherheit eines Fahrzeugs (Zweirädriges Motorfahrzeug)*
AE Form 190-1K	R	Report of Administrative Action
AE Form 190-1S	T	Request for POV Registration/Insurance Cancellation
AE Form 190-1T	R	Application for U.S. Forces POV Certificate of License and Allied Transactions
AE Form 190-1X	D	Answer Sheet—Driver Examination for Germany for Privately Owned Motor Vehicle Operators
AE Form 190-1Y	D/T	What To Do If You Have an Accident
AE Form 190-1Z	R	Certification of Release/Donation of Privately Owned Vehicle (POV)
AE Form 190-1AA	R	Application for Motor Vehicle Registration or Renewal and Allied Transactions
AE Form 190-1AB	R	Community Daily Activity Report
AE Form 190-1AC	R	Certificate of Nondelivery of Vehicle
AE Form 190-1AD	R	Special Power of Attorney To Operate, Register, Sell, or Otherwise Dispose of a Privately Owned Vehicle (POV)
AE Form 190-1AF	R	Agent Responsibilities
AE Form 190-1AG	R	Request for a Waiver of the Number of Privately Owned Vehicles (POVs) Authorized to Register
AE Form 190-1AJ	R	Suspense/Clearance Form
AE Form 190-1AP	R	Request for Exception to Policy (Authority to Operate a Privately Owned Vehicle (POV))
AE Form 190-1AQ	R	Authority to Operate a Privately Owned Vehicle (POV) (Family Member)/*Berechtigungsausweis*
AE Form 190-1AS	R	Warning Notice of Possible Abandonment
AE Form 190-1AU	R	Report of Stolen/Lost/Recovered Vehicle or License Plates
AE Form 190-1AW	R	Certification of Medical Eligibility for a Handicapped-Parking Card
AE Form 190-1AX	R	Army in Europe Armed Forces Traffic Ticket—Report of Action

Table B-1
Prescribed Forms and Publications—Continued

Item	*Source Code	Title
AE Pamphlet 190-34 USAFE Pamphlet 31-206	D	Drivers Handbook and Examination Manual for Germany
AE Pamphlet 190-34-1/ USAFE Pamphlet 31-206V1	D	Drivers Examination for Privately Owned Vehicle Operators of the U.S. Forces in Germany (Version 1)
AE Pamphlet 190-34-2/ USAFE Pamphlet 31-206V2	D	Drivers Examination for Privately Owned Vehicle Operators of the U.S. Forces in Germany (Version 2)
AE Pamphlet 190-34-3/ USAFE Pamphlet 31-206V3	D	Drivers Examination for Privately Owned Vehicle Operators of the U.S. Forces in Germany (Version 3)
AE Pamphlet 190-34-4/ USAFE Pamphlet 31-206V4	D	Drivers Examination for Privately Owned Vehicle Operators of the U.S. Forces in Germany (Version 4)
AE Pamphlet 190-34-5	D	Motorcycle Examination for Privately Owned Motorcycle Operators in Germany (Version 1)
AE Pamphlet 190-34-6	D	Motorcycle Examination for Privately Owned Motorcycle Operators in Germany (Version 2)
AE Pamphlet 550-160/ USAFE Pamphlet 31-205	R	Insuring Your Car in Germany
AE MISC PUB 190-1A	R	Traffic Rules for U.S. Forces Installations in Germany/ *Für US-Liegenschaften in Deutschland geltende Verkehrsregeln*

***Source Code Explanation**

Code	Supply Source
A	For Army units: USAG Rheinland-Pfalz, Publications & Records Center of Excellence (IMRP-HRR), Unit 39090, APO AE 09090-9090
	For Air Force units: HQ USAFE/DAP-RPDC, APO AE 09012
D	Only for driver testing stations: USAG Rheinland-Pfalz, Publications & Records Center of Excellence (IMRP-HRR), Unit 39090, APO AE 09090-9090
I	Only for POV inspection stations: USAG Rheinland-Pfalz, Publications & Records Center of Excellence (IMRP-HRR), Unit 39090, APO AE 09090-9090
V	Available only from the USAREUR Registry of Motor Vehicles (RMV)
T	Only for field registration stations: USAG Rheinland-Pfalz, Publications & Records Center of Excellence (IMRP-HRR), Unit 39090, APO AE 09090-9090
R	Available at *https://www.eur.army.mil/aepubs/*
Y	Accountable forms procured from the USAREUR RMV

APPENDIX C
POV INSPECTION STATIONS

SECTION I
REQUIREMENTS AND RESPONSIBILITIES

C-1. GENERAL

a. This appendix prescribes—

(1) Responsibilities and requirements for establishing privately owned vehicle (POV) inspection stations.

(2) POV mechanical and safety-inspection standards.

b. Procedures for POV mechanical and safety-inspection standards in this appendix are the responsibility of the Director, Base Support Operations Maintenance Division (BMD), 405th Army Field Support Brigade (405th AFSB). Clarification may be obtained from the Director, BMD, at 405th AFSB (BMD), Unit 28132, APO AE 09114-8132.

c. Inspectors will use AE Form 190-1H for motorized vehicles with three or more wheels and AE Form 190-1I for motorcycles.

d. Mechanical and safety inspections will be conducted at no expense to the POV owner.

e. A POV owner's Army post office (APO) designation, unit, geographic location, or other nonmaterial factors will not be used as a reason to deny POV owners a safety inspection.

f. U.S. Forces personnel may obtain a courtesy inspection before selling or buying a U.S. Forces-registered POV or before buying a German-registered POV if the POV is properly registered and operational. The inspector will not inspect a vehicle that does not have a valid registration. The U.S. Forces member must be present for such inspections. At no time will inspections be provided to dealers. Only one U.S. Forces member will be allowed in U.S. Forces inspection facilities during an inspection.

g. U.S. Forces-registered POVs must carry a first-aid kit that meets or exceeds German legal requirements and the standards of the *Deutsche Industrienorm* (*DIN*) (German Industry Standard) 13164. POV inspectors will check for a first-aid kit in the POV during the inspection. Inspectors will not open the kit. Kits must not be more than 5 years old.

h. U.S. Forces-registered POVs must carry an approved portable, reflectorized warning triangle. Inspectors will not open the warning triangle. Vehicles weighing more than 3.5 metric tons will be rejected if they are not equipped with an approved warning triangle, four-way flasher, or portable flashing lamp.

i. U.S. Forces-registered POVs must carry a reflective vest to be used in case of vehicle breakdown.

j. The person in charge of the inspection facility should attempt to resolve disagreements between inspectors and POV owners when applying the standards in this appendix. Disagreements that cannot be resolved locally will be referred to Director, BMD, 405th AFSB.

C-2. INSPECTION FACILITIES REQUIREMENTS

a. Facilities for mechanically inspecting POVs will be established and maintained based on local needs, as determined by the Director, BMD, 405th AFSB, and the installation commander (for Air Force units).

b. The Director, BMD, 405th AFSB, will request approval to establish or discontinue POV mechanical inspection facilities from the CG, Army Sustainment Command, in coordination with the USAREUR Registry of Motor Vehicles (RMV). Requests must include the following:

(1) The distance (one way) to the nearest POV inspection station.

(2) The average number of monthly inspections.

(3) Information on the availability of adequate inspection and testing facilities and equipment. An inspection station must be in an enclosed building and have at least the following equipment available for the inspector:

(a) A pit, ramp, or lift.

(b) Adequate drop-lights.

(c) A headlight-alignment device approved by the U.S. Department of Transportation (DOT) (or equivalent).

(d) A hydraulic pit-jack.

(e) A brake-testing machine.

(f) A paved brake-test strip.

(4) Information on the availability of qualified inspectors to operate the inspection facility. The Director, 405th AFSB BMD, and the appropriate USAFE/AFAFRICA installation commander will designate (in writing) personnel authorized to inspect POVs. The names of POV inspectors must be posted in a clearly visible place at the POV inspection station. To qualify as an inspector, a person must be—

(a) A Soldier in the grade of sergeant (E5), a U.S. civilian employee in the grade of GS-5, or a local national employee in the grade of C4, or above.

(b) In the Army military occupational specialty (MOS) 91B (Wheeled Vehicle Mechanic), Air Force specialty code 2T3XX (Vehicle Maintenance), or an equivalent U.S. civilian or LN civilian job series.

C-3. ACTIONS TO BE TAKEN WHEN A POV FAILS INSPECTION

a. Before inspecting a U.S. Forces-registered vehicle, the POV inspector will stamp AE Form 190-1A with the official inspection stamp and enter the date inspected in the signature block of the original copy. If the vehicle owner has lost the original copy of the POV registration, the transfer copy will be stamped. For a German-registered vehicle, the back cover of the *Kraftfahrzeugbrief* (*KFB*) (vehicle-registration certificate) or the remarks section in the new version must be stamped and dated. This provision does not apply to courtesy inspections. For vehicles registered in countries other than Germany, the original copy of the bill of sale will be stamped and dated. In all cases, the POV inspector will stamp and date AE Form 190-1H or AE Form 190-1I and give it to the POV owner. If a non-U.S.-Forces-registered vehicle is to be given a courtesy inspection, the owner of the vehicle must be present with the buyer when the vehicle is inspected.

b. Identification numbers that do not match the registration document during the initial inspection will be reported by the inspector to the local registration office for further action. Identification numbers are permanently installed or stamped in the frame or the body.

c. If a POV fails a thoroughly completed mechanical inspection, the inspector will—

(1) Fill in all blocks on AE Form 190-1H or AE Form 190-1I.

(2) Stamp the original copy of AE Form 190-1A "REJECTED," the date, and official inspection stamps.

(3) Stamp AE Form 190-1H or AE Form 190-1I "UNSAFE TO OPERATE" if the deficiency constitutes an immediate safety hazard. If the vehicle is unsafe to operate, it must be registered nonoperational immediately. If the vehicle is not unsafe to operate, it may be driven to a repair facility and repaired. The POV owner is responsible for initiating a safe movement of the POV from the inspection station to a point of repair or disposal

d. A previously inspected vehicle must be reinspected at the original inspection station and will be checked only for the deficiencies listed on the validated AE Form 190-1H or AE Form 190-1I unless the inspection period exceeds 30 calendar days or a hazardous condition is identified during reinspection that could lead to the loss of life, limb, or eyesight. Inspected vehicles exceeding the 30-day period must be registered as nonoperational and undergo a complete new inspection after the repair is completed. AE Form 190-1H or AE Form 190-1I will be used only if the original copy of the POV registration, *KFB*, or bill of sale bearing the stamp of the original inspection station is present. If the stamp is missing from either document, a complete mechanical inspection will be done.

C-4. PROCEDURES FOR ISSUING SAFETY STAMPS

a. The 405th AFSB BMD will procure, issue, control, manage, and dispose of POV safety-inspection stamps.

(1) Safety-inspection stamps are controlled and accountable items. They will be kept in a locked container at the end of the business day or at other times when they are not being used. The 405th AFSB BMD will maintain accountability for one safety stamp for each facility conducting safety inspections and for all unused stamps.

(2) The 405th AFSB BMD will issue stamps using DA Form 2062. Requests to replace stamps that are lost, stolen, mutilated, or worn must be submitted in writing. The 405th AFSB BMD and the appropriate USAFE/AFAFRICA installation commanders will report loss or theft to the military police, security forces, the office of special investigations, or the criminal investigation division. Requests for stamps submitted by telephone will be accepted only as exceptions. Requests by telephone must be followed by written requests within 10 calendar days after the call.

(3) The 405th AFSB BMD will provide replacement stamps on a one-for-one basis within 2 workdays after receiving the written request. The stamp and DA Form 2062 will be sent by registered mail or picked up by a courier if prearranged. Not more than one stamp is authorized per station.

b. On receipt of the stamp, the receiver will sign the original DA Form 2062 and return it with the old stamp (or what is left of the old stamp) to the 405th AFSB BMD at 405th AFSB (BMD), Unit 28132, APO AE 09114-8132, by registered mail.

SECTION II
POV MECHANICAL STANDARDS

C-5. DEFINITIONS

1958 Geneva Agreement
The Agreement Concerning the Adoption of Uniform Technical Prescriptions for Wheeled Vehicles, Equipment and Parts Which Can Be Fitted and/or Used on Wheeled Vehicles and the Conditions for Reciprocal Recognition of Approvals Granted on the Basis of These Prescriptions (available at *http://www.unece.org/trans/main/wp29/wp29wgs/wp29gen/wp29fdocstts.html*)

1997 Vienna Agreement
The 1997 Vienna Agreement Concerning the Adoption of Uniform Conditions for Periodical Technical Inspections of Wheeled Vehicles and the Reciprocal Recognition of Such Inspections

Economic Commission for Europe regulation (ECE-R)
A regulation annexed to the 1958 Geneva Agreement

historical vehicle
A motor vehicle that is at least 30 years old (from the date of manufacture) and has been certified by the German *Technischer Überwachungsverein* (*TÜV*) (Technical Control Association) or the *Deutscher Kraftfahrzeug-Überwachungs-Verein (DEKRA)* (Technical Vehicle Inspection Association)

inappropriate repair or modification
A repair or modification that adversely affects the road safety of a vehicle

international technical inspection certificate
A certificate about the first registration after manufacture and the periodical technical inspections of wheeled vehicles in compliance with Article 1 and appendix 2 of the 1997 Vienna Agreement (above)

new vehicle
A vehicle, including demonstrators, under 10,000 miles and not previously registered in any system for more than 3 months. Vehicles with more than 10,000 miles are not considered new vehicles and must be inspected.

periodical technical inspection
A procedure by which authorized technical inspection centers responsible for conducting inspection tests declare, after carrying out required verifications, that wheeled vehicles conform to established requirements

verification
Proof of compliance with established requirements through tests and checks carried out using techniques and equipment currently available, and without the use of tools to dismantle or remove any part of the vehicle

wheeled vehicle
Motor vehicles of categories M2, M3, N2, and N3, and trailers of categories O3 and O4, as specified in the Consolidated Resolution on the Construction of Vehicles (R.E.3) (*http://www.unece.org/fileadmin/DAM/trans/main/wp29/wp29resolutions/ECE-TRANS-WP29-78-r3e.pdf*), used in international transport whose permissible maximum mass exceeds 3,500 kilograms (kg), except those used to carry passengers and having not more than eight seats in addition to the driver's seat

C-6. GENERAL

a. POVs must meet the minimum standards of exterior condition considered acceptable according to German requirements. POVs that have deficiencies (for example, missing grill or fenders; broken windows; extensive body damage; deteriorated tailgates, engine covers, trunk lids, or running boards) will be rejected.

b. Receipts for ordered replacement parts will not be acceptable substitutes for repairs required to meet mechanical standards in this appendix except when the part does not pose an immediate safety hazard (for example, cracked lens of a turn-signal light).

c. POV inspectors will not use sharp instruments (for example, screwdrivers, tire tools, razor blades) when checking for body or frame rust or other body condition. Only hand pressure or a small rubber mallet may be used.

d. The inspector may pass a vehicle with minor defects such as inoperable license-plate light, parking light, back-up light, or lens with small cracks. The defects will be documented on the POV inspection form (AE Form 190-1H or AE Form 190-1I), and the owner will be told to have the deficiencies corrected. If a vehicle is found to have both major defects and minor defects, all defects must be corrected before reinspection.

C-7. BODY

a. Vehicles with major alterations to the frame (for example, bent, cut, rewelded) must have a DOT or *TÜV* certification.

b. Spoilers attached to vehicles must meet the manufacturer's installation specifications. Homemade spoilers or spoilers that do not meet the manufacturer's specifications will be grounds for rejection.

c. Minimum body ground clearance must not be less than 90 millimeters (mm) for flexible body parts and hard parts such as the exhaust, frame components, and suspension.

C-8. ENGINE AND TRANSMISSION

a. A vehicle will be rejected if there is evidence of an ongoing slow leak of oil or antifreeze or saturation of the underbody of the vehicle. If there is evidence of a slow leak, the undercarriage must be cleaned and reinspected to verify whether or not there is still a slow leak. The vehicle will be rejected if there is an excessive class III leak. An excessive class III leak is any leak that allows fluid to drop from the vehicle onto the ground while the vehicle is being inspected.

b. Vehicles with automatic transmission that start when the gearshift lever is in gear will be rejected.

c. A vehicle will be rejected if the gearshift of the vehicle can be placed into reverse gear without engaging the lock-out mechanism on both automatic- and standard-transmission vehicles.

d. A vehicle will be rejected if the clutch shows evidence of slipping.

C-9. PAINTING AND MARKINGS

a. Painting or markings resembling those normally used on U.S. Government-owned vehicles and markings that might associate a POV with a foreign government are prohibited.

b. After-market luminous paintings or markings may be used only on the rear of a POV.

C-10. LIGHTS

a. Installed and required lights specified in this paragraph must work properly. Exterior lights with broken or missing lenses are not considered working properly. Lenses with small cracks will not be a reason for failing inspection.

b. Headlights (high and low beams) must be adjusted so that the light pattern strikes the headlight-alignment device within the specified range. Unsealed headlights corroded to an extent that the emission of light is insufficient are not acceptable.

c. Foglights are not required. If foglights are mounted, they must be installed to operate only with low-beam headlights.

d. An after-market-installed rear foglight (red)—

(1) Must be mounted on the left rear of the POV, separated by at least 4 inches (in) (100 mm) from the taillights.

(2) Must be mounted so that the upper edge of the light-emission surface is no more than 32 in (800 mm) above the road surface.

(3) Should be capable of being turned on by a separate switch and have an indicator light inside the vehicle that remains on while the foglight is on.

e. Class 3 POVs must have two or more taillights and stoplights. Taillights must emit a red light visible from 100 feet (ft) (30 meters (m)) in sunlight. Stoplights must emit a red light visible from 500 ft (150 m) in normal sunlight. Class 1, 1b, 4, and 5 POVs (app I) must have at least one taillight and stoplight that are in compliance with the requirements for class 3 POVs.

f. A taillight or separate lamp must light up the rear license plate and make it clearly legible from 82 ft (25 m). This light must be wired to work when headlights or parking lights are on. All lamps must work.

g. Back-up lights, if installed, must be operational and function only when the transmission is in reverse gear.

h. POVs (except for class 4 and 5 motorcycles with an engine capacity of 50 cubic centimeters (cc) or less) must be equipped with directional signals as part of the lighting system. Directional lights, light indicators, switches, flashers, and wiring must be operational. The external directional lights must be positioned to the front and rear of the POV to be visible from at least100 ft (30 m) in normal daylight.

i. The four-way flasher system (hazard lights) on POVs with more than two wheels (except motorcycles with sidecars) must be operational. The hazard light must operate with the ignition on or off, be able to be turned on and off from inside the vehicle, and have an indicator light inside the vehicle to alert the POV operator that the system is on. The four lights must flash at the same time 60 to 120 times per minute.

j. Installing any of the following types of lighting is prohibited:

(1) White, amber, or any other color lights behind the grill for the purpose of lighting up the grill.

(2) Lights in the wheel wells, under fenders, or behind the tires.

(3) Additional lighting in or around the vehicle windshield, windows, or rear window that does not enhance vehicle safety. Vehicles must not have more than two original or additional stoplights affixed in the rear window.

(4) Decorative lighting around the license plate.

(5) Headlights in colors other than the color installed by the manufacturer (for example, pink, blue, green add-on lights or lights that can change color).

k. Lighting and signal systems on antique or classic vehicles (that is, vehicles older than 30 years) will be inspected using the technical standards that applied during the year that the vehicle was manufactured.

l. Some newer motorcycles are being equipped with orange lights that stay on during the operation of the motorcycle for added safety. These lights meet U.S. safety specifications and are authorized.

C-11. MIRRORS

a. Each passenger car must have an inside rearview mirror and an outside rearview mirror of unit magnification on the driver's side. The inside mirror must provide a maximum field of view of 200 ft (61 m) to the rear of the vehicle on a level road surface. The outside mirror must provide the driver with a view of a level road surface extending 8 ft (2.5 m) from the tangent plane 35 ft (11 m) behind the driver's eyes.

b. The mirror mounting must provide a stable support for the mirror and allow for mirror adjustment by tilting in both the horizontal and vertical directions. Neither the outside mirror nor the mirror mounting may protrude farther than the widest part of the vehicle body except to the extent necessary to produce a field of view meeting or exceeding the requirements in subparagraph a above.

c. A two-wheeled motor vehicle must be equipped with two rearview mirrors. Each mirror must be mounted with a stable support so that the horizontal center of the reflective surface is at least 11 in (275 mm) outward of the longitudinal centerline of the motorcycle. The mirrors must be adjustable by tilting in both the horizontal and vertical directions.

d. Right-hand drive vehicles must have a left- and a right-side mirror.

e. Mirrors must not be discolored, cracked, or broken.

f. Vehicles with rear tinted windows missing one or both exterior mirrors will be grounds for rejection.

C-12. SEATBELTS

a. Passenger cars manufactured to U.S. specifications after 1 January 1968 must be in compliance with Federal Standard 208 (49 CFR). Federal Standard 208 requires a seatbelt for each forward-facing seat position or passive protection in all positions (for example, buses with padded seats).

b. Three-point seatbelts are required for all seat positions in passenger cars.

c. All vehicles manufactured to foreign specifications or American vehicles manufactured before 1 January 1968 must be equipped with at least a lap belt for the driver and front-seat passenger positions.

d. If a vehicle is designed and equipped with a customized kit including single-point-mounted chairs (captain's chairs), all chairs must be equipped with three-point seatbelts.

C-13. BRAKES

a. Brake-test machines will be used when operational. When brake-test machines are not operational, a road test will be conducted. POVs that have been altered (lowered) to an extent that prevents enough ground clearance to safely enter and exit the brake-test machine without causing damage to the spoilers, exhaust, or suspension will be road tested (b below). Refusal of the POV owner to permit a road test of the POV will result in the immediate termination of the inspection.

b. Road tests will be conducted on a level (not to exceed a plus or minus 1 percent grade), dry, smooth, hard-surfaced road that is free of loose material, oil, and grease. Tests will be restricted to a designated area in the vicinity of the inspection station. The service brake will be applied and the vehicle will be brought to a stop as follows:

(1) Vehicles With a Gross Vehicle Weight Rating (GVWR) of 10,000 Pounds (4,500 Kg) or Less. The service-brake system must stop the vehicle in a distance of 25 ft (7.6 m) or less from a speed of 20 miles per hour (mph) (32 kilometers per hour (kph)) without leaving a 12-ft-wide (3.7 m-wide) lane.

(2) Vehicles With a GVWR of More Than 10,000 Pounds (4,500 Kg). The service-brake system must stop single-unit vehicles, except truck-tractors, in a distance of not more than 35 ft (10.6 m), and combination vehicles and truck-tractors in a distance of not more than 40 ft (12 m), from a speed of 20 mph (32 kph) without leaving a 12-ft-wide (3.7 m-wide) lane.

c. Motorcycles, trikes, and quads (glossary) must have a split service-brake system or two independently activated service-brake systems. The equipment-brake tests will be conducted by the owner under the supervision of the POV inspector.

NOTE: Tire inflation pressure should be within the limits recommended by the tire manufacturer before the brake-machine test or road test is conducted.

C-14. TIRES AND RIMS

a. The tread depth of the vehicle tires must be at least 1/16 of an inch (1.6 mm). Inspectors will use a tread-depth gauge at any two adjacent major grooves at three areas spaced approximately equally around the outside of the tire. If at any point the tire tread is less than 1/16 of an inch (1.6 mm), the tire is excessively worn. Tires must be free of chunking, breaks, bumps, knots, or bulges showing cord or tread separation from the casing or other adjacent materials. The use of re-grooved tires is prohibited. Tire cords or belting materials must not be exposed to the naked eye or when cuts or abrasions on the tire are probed.

b. Carrying a spare tire is no longer required in Germany. If a spare tire or emergency space-saving tires are carried, they will not be subject to inspection. Externally mounted spare tires, however, must be secured with the original mount.

c. Spinning rims attached to vehicles are prohibited and will cause the vehicle to be rejected.

d. POVs on which the tire-thread area extends beyond the outermost portion of the fender well when viewed from above are not authorized and will be rejected.

e. A tire rim must not be bent, cracked, have elongated bolt holes, or show repair by welding. Tire and rim combinations other than those recommended by the manufacturer will cause the POV to be rejected. Wheel nuts and bolts must be in place and tight.

f. If the tires of a vehicle are determined to be rated too low for the maximum speed of the vehicle, the inspector will annotate AE Form 190-1H “TOO LOW RATED TIRES,” but the vehicle will not fail the inspection because of this safety issue.

g. German law requires that vehicles have “adequate tires” for winter driving. This means that in snow areas, vehicles must have snow tires or all season tires (M/S label or snowflake label) mounted. Chains must be carried in the trunk of the vehicle. Vehicle owners should check with an authorized tire dealer for any unique restrictions in their area. Winter tires should have a tread depth of at least 3 mm.

C-15. EXHAUST SYSTEM

a. The exhaust system must be secured tightly and be free of leaks. Tailpipes must extend behind the rear wheels or beyond the side edge or rear of the vehicle body unless prevented by the manufacturer’s specifications.

b. A POV may be rejected if it emits excessive blue or black smoke.

c. All parts of the exhaust line must be strong enough to resist normal hand pressure applied by the inspector. All repairs to exhaust systems must be made by welding or component replacement. Repairs using muffler or exhaust tape or chemical weld compounds (for example, liquid metal) are considered temporary repairs and will not be accepted. Securing attachments must be present, tight, and similar to original manufacturer parts.

d. If a motorcycle does not have a tachometer (revolutions-per-minute (RPM) reader) and seems to be very loud, inspectors may require the owner to go to the German *TÜV* or *DEKRA* for verification that the motorcycle is within noise limits.

C-16. AIRBAGS

a. Airbags in vehicles equipped with airbags must be operational. A vehicle will be rejected if the light that indicates the airbag has been activated stays illuminated or is missing.

b. Any modifications to airbag systems or removal of airbag-system parts is prohibited unless the DOT, *TÜV*, or *DEKRA* certifies that the modification or alteration of an airbag system does not compromise the safe operation of the vehicle.

C- 17. STEERING SYSTEMS

a. A vehicle will be rejected if the centrifugal velocity boot is torn or indicates evidence that it is slinging grease from being torn, split, or dry-rotted. Special attention should be given to the brake-pad area to ensure that a torn boot has not contaminated the pads with grease and that the drive shaft universal joint has not been compromised by a lack of grease.

b. A vehicle will be rejected if the installed steering-wheel lock, gearshift lock, or electronic security-lock system does not function properly.

c. A vehicle will be rejected if the steering wheel or steering column has in-and-out, sideways, or up-and-down play. Adjustable steering-wheel columns must lock positively in all adjustment positions in accordance with the manufacturer’s specifications.

C-18. DOORS AND FRAMES

a. Latching devices, including locks on doors, must be operational. Nonoperational electrically operated door locks will not cause a POV to be rejected if all doors can be locked and unlocked manually.

b. Frames and one-piece bodies must not be broken, bent, or corroded to an extent that the chassis is weakened or the wheel-tracking is impaired. The undercarriage will be inspected for rust damage. Structural parts of floorboards that are rusted through and frames rebuilt with filler or riveted sheet metal will cause a POV to be rejected.

c. POVs with body damage will not be driven if the damage impairs POV accessories (for example, broken or misaligned headlights, loose exhaust system, broken mirrors, inoperable hood).

d. POVs with body rust and corrosion on doors or frames that weaken areas protecting the driver or passengers will be rejected. Crucial areas are door panels, doorposts, and rocker panels.

e. POVs that have metal posts and panels repaired by body putty or other filler material will be rejected. Rust damage that does not threaten safety is allowed.

f. POVs (except motorcycles and motorbikes) should have bumpers of the kind provided by the manufacturer firmly attached to both the front and rear of the vehicle.

g. Any repair or modification to the original bumpers will be examined for safety and strength. Exceptions include bumpers, bumper mounts, and other protrusions that have been removed, or vehicles that are manufactured without bumpers.

h. Bumpers will not be removed if they have built-in lights (for example, turn signals, taillights).

C-19. HORNS

POVs must be equipped with horns or other authorized warning devices capable of being heard from at least 200 ft (61m) away. The horn must be controlled by a button or another device installed on the steering wheel or in the area of the driver’s view.

C-20. WINDSHIELD WIPERS

a. Windshield wipers must be operational and the wiper blades must be serviceable to ensure visibility. If installed, defrosters must be functional.

b. Windshield wipers are not to be confused with headlight washers and wipers. POVs that have nonoperational headlight wipers will not be rejected.

C-21. REFLECTORS

a. All POVs and trailers must be equipped with at least two red rear reflectors.

b. Motorcycles and motor-scooters must be equipped with at least one red rear reflector.

c. Reflectors required by subparagraphs a or b above may be attached separately or combined with taillights.

C-22. GLASS

a. POVs must be equipped with safety glass, except when Plexiglas is used by the vehicle manufacturer. For the purpose of this appendix, safety glass is glass treated or combined with other materials to reduce the likelihood of injury.

b. Vehicle glass must not have breaks. Glass in the front, rear, and side windows directly to the right and left of the driver must not have cracks that impair or distort the driver's vision. The windshield must be free of damage (except for scratches and chips) in that part of the windshield located in the driver's view. Cracks outside the driver's view that are over 6 in (150 mm) in diameter, star-shaped fractures over 1 in (25 mm) in diameter, and any conditions concerning glass breaks or cracks cited in this paragraph will be determined to obstruct the driver's visibility and will cause the POV to be rejected.

c. Decals that distort or impair the driver's view must not be attached to the front, rear, or side windows of the vehicle. Unauthorized stickers must be removed before inspection.

C-23. MOTORCYCLES

a. Inspectors will reject motorcycles that have been altered to change the center of gravity or wheelbase from that established by the manufacturer. Motorcycles with alterations hazardous to other highway users (for example, missing chain-guards or fenders) will be rejected. Motorcycles with after-market, straight-through exhaust pipes and motorcycles with original mufflers that have the sound absorber removed will be rejected. Steel wool and other like material will not be used instead of factory baffles to pack mufflers for sound dampening.

b. After-market-installed turn-signal lights must meet the following requirements:

(1) Front turn-signal lights must be positioned 100 mm from the edge of the headlight, 170 mm from each other (from the edge of the turn-signal lights), and 350 mm above the ground (from the low edge of the turn-signal light). Front turn-signal lights must be amber.

(2) Rear turn-signal lights must be positioned 120 mm from each other (from the edge of the turn-signal lights) and 350 mm from the low edge of the turn-signal light to the ground. Rear turn-signal lights may be amber or red.

c. Motorcycles with factory-installed amber running lights that are on when the engine is running are authorized.

C-24. QUADS AND TRIKES (LIGHT MOTOR VEHICLES)

a. Quads and trikes must be equipped with the following items as prescribed by the *Straßenverkehrs-Zulassungs-Ordnung* (*StVZO*) (Road Traffic Licensing Regulation) and recommended manufacturer's specifications:

(1) One headlight with high and low beam if the vehicle has a width of 100 centimeters (cm) or less.

(2) Two headlights with high and low beam if the width of the vehicle exceeds 100 cm.

(3) One taillight if the vehicle has a width of 100 cm or less.

(4) Two taillights if the width of the vehicle exceeds 100 cm.

(5) License-plate light (rear).

(6) Turn signals and four-way flasher.

(7) Two stoplights.

(8) Signal horn.

(9) Back-up light if the quad is equipped with a reverse gear.

(10) Outside mirrors left and right.

(11) Front and rear fenders.

(12) Speedometer.

(13) Seatbelts for each seat when equipped by the manufacturer.

b. A quad may be equipped with a separate front and rear brake system similar to motorcycles.

c. Quads and trikes must carry a warning triangle and first-aid kit. Operators must wear the same protective clothing and equipment as motorcycle riders (basic pub, para 5-6b(6)).

d. Quads and trikes over 400 kg net weight must be equipped with a reverse gear.

e. If a quad or trike does not have a tachometer (RPM reader) and seems to be very loud, inspectors may require the owner to go to the German *TÜV* or *DEKRA* for verification that the quad or trike is within noise limits.

C-25. TRAILER-TOWING VEHICLES

a. Trailer-towing vehicles must be equipped with—

(1) Electrical receptacles for connecting trailer lights (taillights, directional lights, and stoplights). This does not apply to class A, A1, and M vehicles when the taillights, directional lights, and stoplights of the towing vehicle can be clearly seen over the towed trailer.

(2) Two outside rearview mirrors that enable the driver to see beyond the towed trailer or camper.

b. Commercially designed trailer hitches must be attached to the vehicle framework for vehicles towing trailers with a gross weight (that is, trailer weight including load) of more than 2,000 pounds (lb) (900 kg). The hitches must be attached to the vehicle according to the manufacturer's specifications.

C-26. TRAILERS

a. Commercially manufactured and homemade trailers must be registered. For homemade trailer frames, the shape of the metal-frame structural parts must be U, I, L, or box. The frame must support the intended load without bending or swaying. Commercial axles and suspension-system components capable of supporting loaded trailers must be used. The suspension system must support the intended load without swaying or dipping.

b. Trailer wheels must be covered or equipped with fenders that prevent trailer tires from throwing objects into the path of following vehicles.

c. Trailer taillights, directional lights, stoplights, and reflectors must meet the same requirements as those for the towing vehicle. This does not apply to trailers towed by class A, A1, and M vehicles when the taillights, directional lights, and stoplights of the towing vehicle can be clearly seen over the towed trailer. The trailer-light system must match the towing vehicle electrical system (1-circuit or 2-circuit system) and have reflective triangles (6 in (15 cm) on each side) mounted as close to the outer edges as possible.

d. The owner is responsible for the strength of all welds and bolts used for attachments on homemade trailers. All nuts must be secured with lock washers or cotter pins.

e. The trailer hitch or coupling must be of commercial make.

f. Trailers with commercial tandem axles are acceptable.

g. Brakes are required on trailers when the gross weight exceeds 1,650 lb (750 kg) or one half of the weight of the towing vehicle. The owner must provide verified written proof of gross weight and have a date plate attached to the frame that displays the serial number, verified gross weight, and maximum payload weight. Trailers that exceed 1,650 lb (750 kg) gross weight must be equipped with brakes and a safety chain or cable that would engage the brakes if the trailer became detached.

h. A trailer brought in for inspection must be accompanied by the vehicle that will tow it. This will allow the inspector to check for proper connections, mountings, and compatibility.

i. Homemade and manufactured trailers must go through the *TÜV* or *DEKRA* for inspection and certification for safety. Owners must present the certification to the safety-inspection station and the community FRS.

C-27. WINDOW TINTING

Only factory window tinting manufactured within the glass by the manufacturer of the vehicle is authorized. Clear or tinted film is prohibited on the windshield and the driver and passenger front-door windows, but is allowed on the rear-door windows and the rear window. Vehicles found with after-market tinting on the windshield or the driver and passenger front-door windows during inspection will be rejected.

SECTION III
TECHNICAL INSPECTIONS

C-28. INSPECTION PROCEDURES AND REASONS FOR REJECTION

The inspection must cover at least the items shown in table C-1. Abbreviations used in this table are defined in the glossary.

Table C-1
Inspection Items, Methods, and Reasons for Rejection

ITEM	METHOD	REASONS TO REJECT
0. GENERAL		
0.1. Applies to all test items and vehicle parts	The described methods should be applied but may be replaced or supplemented by equally effective methods if respective inspection regulations already exist in Germany.	Not in accordance with regulations. Poor repair or modification. Installation of improper vehicle parts.
1. IDENTIFICATION OF THE VEHICLE		
1.1. Registration number plates	Visual inspection.	Vehicle registration plates mounted on the vehicle in a location other than the one specified by the manufacturer. Registration plates mounted using incorrect mounting brackets or not mounted directly to the bumper or vehicle body. Plates mounted in areas that do not meet manufacturer or legal requirements.
1.2. Vehicle identification or serial number	Visual inspection.	Missing or cannot be found. Incomplete or illegible. Not in accordance with vehicle documents or records.
2. BRAKING EQUIPMENT		
2.1. Mechanical condition and operation **NOTE:** Brake components will not be removed during inspection.		
2.1.1. Service brake pedal pivot	Visual inspection of the components while the braking system is operated. Vehicles with power-assisted braking systems should be inspected with the engine switched off.	Pivot too tight. Bearing worn. Excessive wear or play.
2.1.2. Pedal condition and travel of the brake-operating device	Visual inspection of the components while the braking system is operated. Vehicles with power-assisted braking systems should be inspected with the engine switched off.	Excessive or insufficient reserve travel. Brake control not releasing correctly. Antislip provision on brake pedal missing, loose, or worn smooth.

Table C-1
Inspection Items, Methods, and Reasons for Rejection—Continued

ITEM	METHOD	REASONS TO REJECT
2.1.3. Power source or reservoir	Visual inspection of the components at normal working pressure. Check time required for vacuum or air pressure to reach safe working value and function of warning device, multi-circuit-protection valve, and pressure-relief valve.	Insufficient pressure or vacuum to give assistance for at least two brake applications after the warning device has operated, or gauge shows an unsafe reading. The time taken to build up air pressure or vacuum to safe working value is not in accordance with regulations. Multi-circuit-protection valve or pressure-relief valve not working. Air leak causing a noticeable drop in pressure or audible air leaks. External damage likely to affect the function of the braking system.
2.1.4. Low-pressure warning gauge or indicator	Functional check.	Malfunctioning or defective gauge or indicator.
2.1.5. Hand-operated brake-control valve	Visual inspection of the components while the braking system is operated.	Control cracked, damaged, or excessively worn. Malfunction of control valve. Control insecure on valve or valve insecure. Loose connections or leaks in system. Unsatisfactory operation.
2.1.6. Parking-brake lever control, parking-brake ratchet	Visual inspection of the components while the braking system is operated.	Ratchet not holding correctly. Excessive wear at lever pivot or in ratchet mechanism. Excessive movement of lever indicating incorrect adjustment.
2.1.7. Braking valves (foot valves, un-loaders, governors)	Visual inspection of the components while the braking system is operated.	Valve damaged or excessive air leak. Excessive oil discharge from compressor. Valve insecure or inadequately mounted. Hydraulic fluid discharge or leak.
2.1.8. Couplings for trailer brakes	Disconnect braking-system coupling between towing vehicle and trailer.	Tap or self-sealing valve defective. Tap or valve insecure or inadequately mounted. Excessive leaks.

Table C-1
Inspection Items, Methods, and Reasons for Rejection—Continued

ITEM	METHOD	REASONS TO REJECT
2.1.9. Energy storage reservoir pressure tank	Visual inspection.	Tank damaged, corroded, or leaking. Drain device inoperative. Tank insecure or inadequately mounted.
2.1.10. Brake servo units, master cylinder, and hydraulic systems	Visual inspection of the components while the braking system is operated.	Defective or ineffective servo unit. Master cylinder defective or leaking. Master cylinder insecure. Insufficient brake fluid. Master-cylinder-reservoir cap missing. Brake-fluid warning light illuminated or defective. Incorrect functioning of brake-fluid-level warning device.
2.1.11. Rigid brake pipes	Visual inspection of the components while the braking system is operated.	Risk of failure or fracture. Pipes or connections leaking. Pipes damaged or excessively corroded. Pipes misplaced.
2.1.12. Flexible brake hoses	Visual inspection of the components while the braking system is operated.	Risk of failure or fracture. Hoses damaged, chafing, twisted, or too short. Hoses or connections leaking. Hoses bulging under pressure. Hoses porous.
2.1.13. Brake linings and pads	Visual inspection.	Lining or pad excessively worn. Lining or pad contaminated with oil, grease, or other substance.
2.1.14. Brake drums, brake disks	Visual inspection.	Drum or disk excessively worn, excessively scored, cracked, insecure, or fractured. Drum or disk contaminated with oil, grease, or other substance. Back plate insecure.

Table C-1
Inspection Items, Methods, and Reasons for Rejection—Continued

ITEM	METHOD	REASONS TO REJECT
2.1.15. Brake cables, rods, levers, linkages	Visual inspection of the components while the braking system is operated.	Cable damaged or knotted. Component excessively worn or corroded. Cable, rod, or joint insecure. Cable guide defective. Restriction to free movement of the braking system. Abnormal movement of the levers/linkage indicating maladjustment or excessive wear.
2.1.16. Brake actuators including spring brakes, or hydraulic cylinders.	Visual inspection of the components while the braking system is operated.	Actuator cracked or damaged. Actuator leaking. Actuator insecure or inadequately mounted. Actuator excessively corroded. Insufficient or excessive travel of operating piston or diaphragm mechanism. Dust covers missing or excessively damaged.
2.1.17. Load-sensing valve	Visual inspection of the components while the braking system is operated.	Defective linkage. Linkage incorrectly adjusted. Valve seized or inoperative. Valve missing. Inappropriate repair or modification. Missing data plate. Data illegible or not in accordance with regulations.
2.1.18. Automatic slack adjusters and indicators	Visual inspection.	Adjuster damaged, seized, or having abnormal movement, excessive wear, or incorrect adjustment. Adjuster defective. Incorrectly installed.
2.1.19. Endurance braking system (where fitted or required)	Visual inspection.	Insecure connectors or mountings. System obviously defective.
2.1.20. Automatic operation of trailer brakes	Disconnect brake coupling between towing vehicle and trailer.	Trailer brake does not automatically apply when coupling is disconnected

Table C-1
Inspection Items, Methods, and Reasons for Rejection—Continued

ITEM	METHOD	REASONS TO REJECT
2.1.21. Complete braking system	Visual inspection.	Other system devices such as brake-fluid pump or air dryer show external damage or are excessively corroded in a way that adversely affects the braking system. Leakage of air or brake fluid. Any component unsecured or improperly mounted.
2.1.22. Test connections where fitted or required	Visual inspection.	Connections are missing, damaged, unusable, or leaking.
2.2. Service-braking performance and efficiency		
2.2.1. Performance	During a road test or a test on a static brake-testing machine, apply the brakes progressively up to maximum effort.	Inadequate braking effort on one or more wheels. Braking effort from any wheel is less than 70 percent of the maximum effort recorded for the other wheel on the same axle; or, in case of testing on the road, the vehicle deviates excessively from a straight line. No gradual variation in brake effort such as grabbing. Abnormal lag in brake operation of any wheel. Excessive fluctuation of brake force during each complete wheel revolution.
2.2.2. Efficiency	Test with a static brake-testing machine if operational and available. If not, perform a road test to determine proper brake function using a decelerometer. For goods vehicles, the laden braking-system performance should be assessed by testing the vehicle laden, by evaluation using a method based on extrapolation, or by some other acceptable means.	Does not give at least the minimum figure as follows: ● Categories M2 and M3: 50% ● Categories N2 and N3: 43% ● Categories O3 and O4: 40%
2.3. Secondary (emergency) braking-system performance		
2.3.1. Performance	If the secondary braking system is separate from the service-braking system, use the method specified in 2.2.2.	Brake inoperative on one side. Braking effort from any wheel is less than 70 percent of the maximum effort recorded for another wheel on the same axle; or, in case of testing on the road, the vehicle deviates excessively from a straight line. No gradual variation in brake effort (grabbing).

Table C-1
Inspection Items, Methods, and Reasons for Rejection—Continued

ITEM	METHOD	REASONS TO REJECT
2.3.2. Efficiency	If the secondary braking system is separate from the service-braking system, use the method specified in 2.2.2.	Braking effort less than 50 percent of the service-brake performance defined in 2.2.2 in relation to the maximum authorized mass or, in the case of semitrailers, to the sum of the authorized axle loads.
2.4. Parking-brake performance and efficiency		
2.4.1. Performance	Apply the brake during a road test with a decelerometer or test on a static brake-testing machine.	Brake inoperative on one side or, in the case of road-testing, the vehicle deviates excessively from a straight line.
2.4.2. Efficiency	Test with a static brake-testing machine or by a road test using either an indicating or recording decelerometer or with the vehicle on a slope of known gradient. Cargo vehicles should, if possible, be tested while laden.	For all vehicles, does not give at least a braking ratio of 16 percent in relation to the maximum authorized mass; or, for motor vehicles, 12 percent in relation to the maximum authorized combination mass of the vehicle, whichever is the greater.
2.5. Endurance-braking-system performance	Visual inspection and, where possible, testing whether the system functions.	No gradual variation of efficiency (not applicable to exhaust brake systems). System not functioning.
2.6. Antilock braking system	Visual inspection of warning device.	Warning device malfunctioning. Warning device shows system malfunction.
3. STEERING		
3.1. Mechanical condition		
3.1.1. Steering-gear condition	With the vehicle over a pit or on a hoist and with the road wheels off the ground, rotate the steering wheel from lock to lock. Visually inspect the operation of the steering gear.	Roughness in operation of gear. Sector shaft twisted or worn spline. Excessive wear in sector shaft. Excessive “end float” of sector shaft. Leaking.
3.1.2. Steering-gear casing attachment	With the vehicle on a pit or hoist and the weight of the vehicle road wheels on the ground, rotate the steering wheel clockwise and anticlockwise or use a specially adapted wheel-play detector. Visually inspect the attachment of the gear casing to the chassis.	Steering-gear casing not properly attached. Elongated fixing holes in chassis. Missing or fractured fixing bolts. Steering-gear casing fractured.

Table C-1
Inspection Items, Methods, and Reasons for Rejection—Continued

ITEM	METHOD	REASONS TO REJECT
3.1.3. Steering-linkage condition	With the vehicle over a pit or on a hoist and with the road wheels on the ground, rock the steering wheel clockwise and anticlockwise or use a specially adapted wheel-play detector. Visually inspect steering components for wear, fractures, and security.	Relative movement between components that should be fixed. Excessive wear at joints. Fractures or deformation of any component. Absence of locking devices. Misalignment of components (for example, track rod, drag link). Dust cover missing, damaged, or severely deteriorated.
3.1.4. Steering-linkage operation	With the vehicle over a pit or on a hoist and with the road wheels on the ground and the engine running, rotate the steering wheel from lock to lock. Visually inspect movement of linkages.	Moving steering linkage is fouling a fixed part of the chassis. Steering stops not operating.
3.1.5. Power steering	Check steering system for leaks and hydraulic fluid reservoir level (if visible). With the road wheels on the ground and with the engine running, check that the power-steering system is operating.	Fluid leak. Insufficient fluid. Mechanism not working. Mechanism fractured or insecure. Misalignment or fouling of components. Cables or hoses damaged or excessively corroded.
3.2. Steering wheel and column		
3.2.1. Steering-wheel condition	With the road wheels on the ground, rock the steering wheel from side to side at right angles to the column and apply slight downward and upward pressure. Visually inspect play.	Relative movement between steering wheel and column indicating looseness. Absence of retaining device on steering-wheel hub. Fracture or looseness of steering wheel hub, rim, or spokes.
3.2.2. Steering column	With the vehicle over a pit or on a hoist and the mass of the vehicle on the ground, push and pull the steering wheel in line with the column and in various directions at right angles to the column. Visually inspect steering-wheel play and the condition of flexible couplings or universal joints.	Excessive movement of center of steering wheel up or down. Excessive movement of top of column radially from axis of column. Deteriorated flexible coupling. Attachment defective.

Table C-1
Inspection Items, Methods, and Reasons for Rejection—Continued

ITEM	METHOD	REASONS TO REJECT
3.3. Steering play	With the vehicle over a pit or on a hoist, the mass of the vehicle on the road wheels, the engine running for vehicles with power steering, and with the road wheels in the straight-ahead position, lightly turn the steering wheel clockwise and anticlockwise as far as possible without moving the road wheel. Visually inspect for free movement.	Free play in steering excessive (for example, movement of a point on the rim exceeding one-fifth of the diameter of the steering wheel) or not in accordance with regulations.
3.4. Wheel alignment	Check alignment of steered wheels.	Alignment not in accordance with vehicle manufacturer's data or regulations.
3.5. Trailer-steered axle turntable	Inspect visually or by using a specially adapted wheel-play detector.	Component damaged or cracked. Excessive play. Attachment defective.
4. VISIBILITY		
4.1. Field of vision	Visual inspection from the driver's seat.	After-market transparent or tinted material attached to the windshield or the front side windows to the left and right of the driver. Obstruction (including reflecting or tinted film) within the driver's field of view that materially affects his or her view in front or to the sides.
4.2. Condition of glass	Visual inspection. **NOTE:** Repair of minor chips in the windshield area in front of the driver is not authorized by this publication or German law.	Glass in front, rear, or side windows directly to the right or left of the driver with cracks that impair or distort the driver's vision. Windshield with cracks or fracture damage (except for scratches and chips) in that part of the windshield located in the driver's windshield-wiping area. Cracks outside the driver's windshield-wiping area that are larger than 2.5 cm (1 in), star-shaped fractures larger than 12.5 mm (½ in), or any condition concerning glass breaks or cracks that obstruct the driver's visibility.
4.3. Rearview mirrors and other parts for viewing the vicinity of the vehicle	Visual inspection.	Mirror missing or not fitted according to regulations. One or both exterior mirrors missing on a vehicle with tinted rear windows. A mirror not giving an adequate view to the rear. Mirror damaged, loose, or insecure.
4.4. Windshield wipers	Visual inspection and by operation.	Wipers not operating. Wiper blade missing or obviously defective.
4.5. Windshield washers	Visual inspection and by operation.	Washers not operating adequately.

Table C-1
Inspection Items, Methods, and Reasons for Rejection—Continued

ITEM	METHOD	REASONS TO REJECT
5. LAMPS, REFLECTORS, AND ELECTRICAL EQUIPMENT		
5.1. Headlights		
5.1.1. Condition and operation	Visual inspection and by operation.	Defective bulb. Defective lens. Lamp not in accordance with regulations. Lamp not securely attached. Products on lens or bulb that reduce light intensity or change color.
5.1.2. Alignment	Determine the horizontal and vertical aim of each headlight on both main and dipped beam using a headlight-aiming device.	Aim of a headlight not within limits prescribed in regulations.
5.1.3. Switching	Visual inspection and by operation.	Number of headlights illuminated at the same time not according to regulations. Function of control device impaired.
5.1.4. Compliance with regulations	Visual inspection and by operation.	Lamp color, position, or intensity not in accordance with regulations. Headlight height below 56 cm or above 137 cm.
5.1.5. Leveling devices (where mandatory)	Visual inspection and by operation.	Device not operating. Manual device cannot be operated from driver's seat.
5.2. Front and rear position (side) lights, side-marker lights, end outline marker, and daytime running lights		
5.2.1. Condition and operation	Visual inspection and by operation.	Defective bulb or defective lens. Lamp not securely attached.
5.2.2. Compliance with regulations	Visual inspection and by operation.	Lamp color, position, or intensity not in accordance with regulations. Products on lens or bulb that reduce light intensity or change color. Switch does not operate according to regulations.
5.3. Stop lights		
5.3.1. Condition and operation	Visual inspection and by operation.	Defective bulb or defective lens. Light not securely attached.
5.3.2. Compliance with regulations	Visual inspection and by operation.	Light color, position, or intensity not according to regulations. Switch does not operate according to regulations.

Table C-1
Inspection Items, Methods, and Reasons for Rejection—Continued

ITEM	METHOD	REASONS TO REJECT
5.4. Direction indicator and hazard-warning lights **NOTE:** Vehicles not equipped with manufacturer-installed lights are exempt if the vehicle was manufactured before 1967 and not equipped with hazard lights. These vehicles must carry an amber warning light.		
5.4.1. Condition and operation	Visual inspection and by operation.	Defective bulb or defective lens. Light not securely attached.
5.4.2. Compliance with regulations	Visual inspection and by operation.	Light color, position, or intensity not according to regulations.
5.4.3. Switching	Visual inspection and by operation.	Switch does not operate according to regulations.
5.4.4. Flashing frequency	Visual inspection and by operation.	Rate of flashing not according to regulations.
5.5. Front and rear foglights		
5.5.1. Condition and operation	Visual inspection and by operation.	Defective bulb or defective lens. Lamp not securely attached. Front fog lamp out of alignment.
5.5.2. Compliance with regulations	Visual inspection and by operation.	Light color, position, or intensity not according to regulations. System does not operate according to regulations. Rear foglight is not mounted— ● On the left rear of the POV, separated by at least 4 inches (100 mm) from the taillights. ● So that the upper edge of the light-emission surface is no more than 32 inches (800 mm) above the road surface.
5.6. Reversing lights		
5.6.1. Condition and operation	Visual inspection and by operation.	Defective bulb. Defective lens. Light not securely attached.
5.6.2. Compliance with regulations	Visual inspection and by operation. **NOTE:** Reverse lights must be activated only when the vehicle is put in reverse.	Light color, position, or intensity not according to regulations. System does not operate according to regulations.
5.7. Rear registration-plate light		
5.7.1. Condition and operation	Visual inspection and by operation.	Light not illuminating the license plate. Defective bulb. Light not securely attached.

Table C-1
Inspection Items, Methods, and Reasons for Rejection—Continued

ITEM	METHOD	REASONS TO REJECT
5.7.2. Compliance with regulations	Visual inspection and by operation.	System does not operate according to regulations.
5.8. Retro-reflectors, side reflectors, and rear-marking plates; plates and markings (ECE-Rs 69, 70, and 104)		
5.8.1. Condition	Visual inspection.	Reflecting equipment defective or damaged. Reflector or plates not securely attached.
5.8.2. Compliance with regulations	Visual inspection.	Not according to regulations.
5.9. Telltales		
5.9.1. Condition and operation	Visual inspection and by operation.	Not operating.
5.9.2. Compliance with regulations	Visual inspection and by operation.	Not according to regulations.
5.10. Electrical connections between towing vehicle and trailer or semitrailer	Visual inspection. If possible, examine the electrical continuity between the vehicles. In the case of ISO connectors, make sure the contacts are properly assigned.	Fixed components not securely attached. Damaged or deteriorated insulation. Trailer or towing vehicle electrical connections not functioning correctly.
5.11. Electrical wiring	Visual inspection with the vehicle over a pit or on a hoist, including the engine compartment in some cases.	Wiring insecure or not adequately secured. Damaged or deteriorated insulation.
5.12. Nonobligatory lights	Visual inspection and by operation.	A light not fitted according to regulations. Light operation not according to regulations. Total intensity (including headlights) not according to regulations. Light not securely attached.
5.13. Battery	Visual inspection.	Not secure (bracket missing). Leaking. Defective switch (if required). Defective fuses (if required).
6. AXLES, WHEELS, TIRES, AND SUSPENSION		
6.1. Axles		
6.1.1. Axles	Visual inspection with the vehicle over a pit or on a hoist. Wheel-play detectors may be used and are recommended for vehicles with a GVM of more than 3.5 tons.	Axle fractured, cracked, or deformed. Not securely fixed to vehicle.

Table C-1
Inspection Items, Methods, and Reasons for Rejection—Continued

ITEM	METHOD	REASONS TO REJECT
6.1.2. Stub axles	Visual inspection with the vehicle over a pit or on a hoist. Wheel-play detectors may be used and are recommended for vehicles with a GVM of more than 3.5 tons. Apply a vertical or lateral force to each wheel and note the amount of movement between the axle beam and stub axle.	Stub axle fractured or cracked. Excessive wear in the swivel pin or bushes. Excessive movement between stub axle and axle beam. Stub axle pin loose in axle.
6.1.3. Wheel bearings	Visual inspection with the vehicle over a pit or on a hoist. Wheel-play detectors may be used and are recommended for vehicles with a GVM of more than 3.5 tons. Rock the wheel or apply a lateral force to each wheel and note the amount of upward movement of the wheel relative to the stub axle.	Excessive play in a wheel bearing. Wheel bearing too tight or jammed.
6.2. Wheels and tires		
6.2.1. Road- wheel hub	Visual inspection.	Any wheel nuts or studs missing or loose.
6.2.2. Wheels	Visual inspection of both sides of each wheel with the vehicle over a pit or on a hoist.	Any fracture or welding defect. Tire-retaining rings not properly fitted. Wheel badly distorted. Wheel size or type not according to regulations.
6.2.3. Tires	Visual inspection of the whole tire by either rotating the road wheel with it off the ground and the vehicle over a pit or on a hoist or by rolling the vehicle backward and forward over a pit.	Tire size, load capacity, or speed rating not according to the manufacturer's specification. Tires on same axle or on twin wheels of different sizes. Tires on same axle of different construction (radial or cross-ply). Any serious damage or cuts on the tire. Tire's tread depth not according to regulations. Tire rubbing against other components. Regrooved tires not according to regulations.
6.3. Suspension		
6.3.1. Springs	Visual inspection with the vehicle over a pit or on a hoist. Wheel-play detectors may be used and are recommended for vehicles with a GVM of more than 3.5 tons.	Insecure attachment of springs to chassis or axle. A damaged or fractured spring component.
6.3.2. Shock absorbers	Visual inspection with the vehicle over a pit or on a hoist or using special equipment if available.	Insecure attachment of shock absorbers to chassis or axle. Damaged or leaking shock absorber.

Table C-1
Inspection Items, Methods, and Reasons for Rejection—Continued

ITEM	METHOD	REASONS TO REJECT
6.3.3. Torque tubes, radius arms, wishbones, and suspension arms	Visual inspection with the vehicle over a pit or on a hoist. Wheel-play detectors may be used and are recommended for vehicles with a GVM of more than 3.5 tons.	Insecure attachment of component to chassis or axle. A damaged, fractured, or excessively corroded component.
6.3.4. Suspension joints	Visual inspection with the vehicle over a pit or on a hoist. Wheel-play detectors may be used and are recommended for vehicles with a GVM of more than 3.5 tons.	Excessive wear in swivel pin or bushes or at suspension joints. Dust covers missing or severely deteriorated.
6.3.5. Air suspension	Visual inspection.	System inoperable. Any component damaged, modified, or deteriorated in a way that would adversely affect the functioning of the system.
7. CHASSIS AND CHASSIS ATTACHMENTS		
7.1. Chassis or frame and attachments		
7.1.1. General condition	Visual inspection with the vehicle over a pit or on a hoist.	Fracture or deformation of any side or cross member. Insecurity of strengthening plates or fastenings. Excessive corrosion that affects the rigidity of the assembly.
7.1.2. Exhaust pipes and silencers	Visual inspection with the vehicle over a pit or on a hoist.	Insecure or leaking exhaust system. Fumes entering cab or passenger compartment.
7.1.3. Fuel tank and pipes (including heating fuel tank and pipes)	Visual inspection with the vehicle over a pit or on a hoist.	Insecure tank or pipes. Leaking fuel or missing or ineffective filler cap. Damaged or chafed pipes. Fuel stopcock (if required) not operating correctly. Fire risk caused by any of the following: ● Leaking fuel. ● Improper shielding of fuel tank or exhaust. ● Engine compartment condition. LPG/CNG system not according to regulations.
7.1.4. Bumpers, lateral protection and rear underrun devices	Visual inspection.	Looseness or damage likely to cause injury. Device obviously not in accordance with regulations. Bumper missing.

Table C-1
Inspection Items, Methods, and Reasons for Rejection—Continued

ITEM	METHOD	REASONS TO REJECT
7.1.5. Spare-wheel carrier (if fitted)	Visual inspection.	Carrier fractured or insecure. Spare wheel not securely fixed in carrier.
7.1.6. Coupling mechanisms and towing equipment	Visual inspection for wear and correct operation with special attention to any safety device fitted, or use of measuring gauge.	Component damaged, defective, or cracked. Excessive wear in a component. Attachment defective. Any safety device missing or not operating correctly. Any indicator not working.
7.1.7. Transmission	Visual inspection.	Loose or missing securing bolts. Excessive wear in transmission-shaft bearings. Excessive wear in universal joints. Deteriorated flexible couplings. A damaged or bent shaft. Bearing housing fractured or insecure. Dust covers missing or severely deteriorated.
7.1.8. Engine mountings	Visual inspection (not necessarily over a pit or on a hoist).	Deteriorated, loose, or fractured mountings.
7.2. Cab and bodywork		
7.2.1. Condition	Visual inspection.	A loose or damaged panel or part likely to cause injury. Body pillar not secure. Leaks permitting entry of engine or exhaust fumes.
7.2.2. Mounting	Visual inspection over a pit or on a hoist.	Body or cab insecure. Body or cab obviously not located squarely on chassis. Unsecured or missing fixing of body or cab to chassis or cross members. Excessive corrosion at fixing points on integral bodies.

Table C-1
Inspection Items, Methods, and Reasons for Rejection—Continued

ITEM	METHOD	REASONS TO REJECT
7.2.3. Doors and door catches	Visual inspection.	A door will not open or close properly. A door is likely to open inadvertently or will not remain closed. Door, hinges, catches, or pillar missing, loose, or deteriorated.
7.2.4. Floor	Visual inspection over a pit or on a hoist.	Floor insecure or badly deteriorated.
7.2.5. Driver's seat	Visual inspection.	A loose seat or seat with defective structure. Adjustment mechanism not functioning correctly.
7.2.6. Other seats	Visual inspection.	Seats in defective condition or not secure. Seats not fitted according to regulations.
7.2.7. Driving controls	Visual inspection and by operation.	Any control necessary for the safe operation of the vehicle not in good working order. Any control necessary for the safe operation of the vehicle that does not carry out the function for which it is provided (for example, automatic transmission neutral safety switch).
7.2.8. Cab steps	Visual inspection.	Step or step-ring not secure. Step or ring in a condition likely to cause injury to users.
7.2.9. Other interior and exterior fittings and equipment	Visual inspection.	Attachment of other fitting or equipment defective. Other fitting or equipment not according to regulations. Leaking hydraulic equipment.
7.2.10. Mudguards (wings), spray-suppression devices	Visual inspection.	Missing, loose, or badly corroded. Insufficient clearance for road wheel. Not according to regulations.
8. OTHER EQUIPMENT		
8.1. Seatbelts and buckles		
8.1.1. Security of mounting	Visual inspection.	Anchorage point badly deteriorated.

Table C-1
Inspection Items, Methods, and Reasons for Rejection—Continued

ITEM	METHOD	REASONS TO REJECT
8.1.2. Condition	Visual inspection. Function test in case of irregularities.	Mandatory seatbelt missing or not fitted. Seatbelt damaged. Seatbelt not according to regulations. Seatbelt buckle damaged or not functioning correctly. Seatbelt retractor damaged or not functioning correctly.
8.2. Fire extinguisher (if mandatory)	Visual inspection.	Missing. Not according to regulations.
8.3. Locks and antitheft device	Visual inspection and by operation.	Device not functioning to prevent vehicle from being driven.
8.4. Warning triangle	Visual inspection.	Missing or not according to regulations. Will be annotated on the inspection form as a minor deficiency.
8.5. First-aid kit	Visual inspection.	Missing or not according to regulations. Will be annotated on the inspection form as a minor deficiency.
8.6. Reflective vest	Visual inspection.	Missing or not according to regulations. Will be annotated on the inspection form as a minor deficiency.
8.7. Wheel chocks (if mandatory)	Visual inspection.	Missing or not in good condition.
8.8. Audible warning device (signal horn)	Visual inspection and by operation.	Not working. Control insecure.
8.9. Speedometer	Visual inspection or by operation during road test.	Not fitted according to regulations. Not operational. Not capable of being illuminated.
9. ENVIRONMENTAL COMPATIBILITY		
9.1. Noise	Paragraphs C-29 and C-30 of section IV below provide details on noise levels and noise-level testing.	

SECTION IV
NOISE LEVELS

C-29. NOISE LEVELS OF MUFFLERS AND EXHAUST SYSTEMS

All exhaust systems (manufacturer installed, or after-market) of motorcycles and automobiles will be inspected for noise levels according to the procedures in paragraph C-30. Motor vehicles exceeding a noise level of 95 decibels will be rejected.

NOTE: Many after-market exhaust systems do not conform to German noise-level standards. When a vehicle is rejected because the after-market system does not meet German standards, the owner must remove the nonconforming exhaust system and replace it with the original factory equipment or a *TÜV*-approved after-market system. If neither of these options is possible, the vehicle must be registered nonoperational.

C-30. NOISE-LEVEL TESTING

A stationary test will be conducted in accordance with ECE-R 41, annex 3 (for motorcycles); ECE-R 51, annex 3 (for POVs) (available at *http://www.unece.org/fileadmin/DAM/trans/main/wp29/wp29regs/R041r2e.pdf* and *http://www.unece.org/fileadmin/DAM/trans/main/wp29/wp29regs/R051r2e.pdf*); or the Code of Federal Regulations, Title 40, volume 16, part 205 (available at *http://www.nonoise.org/lawlib/cfr/40/40cfr205.htm*); as well as described in figures C-1 and C-2 and table C-2.

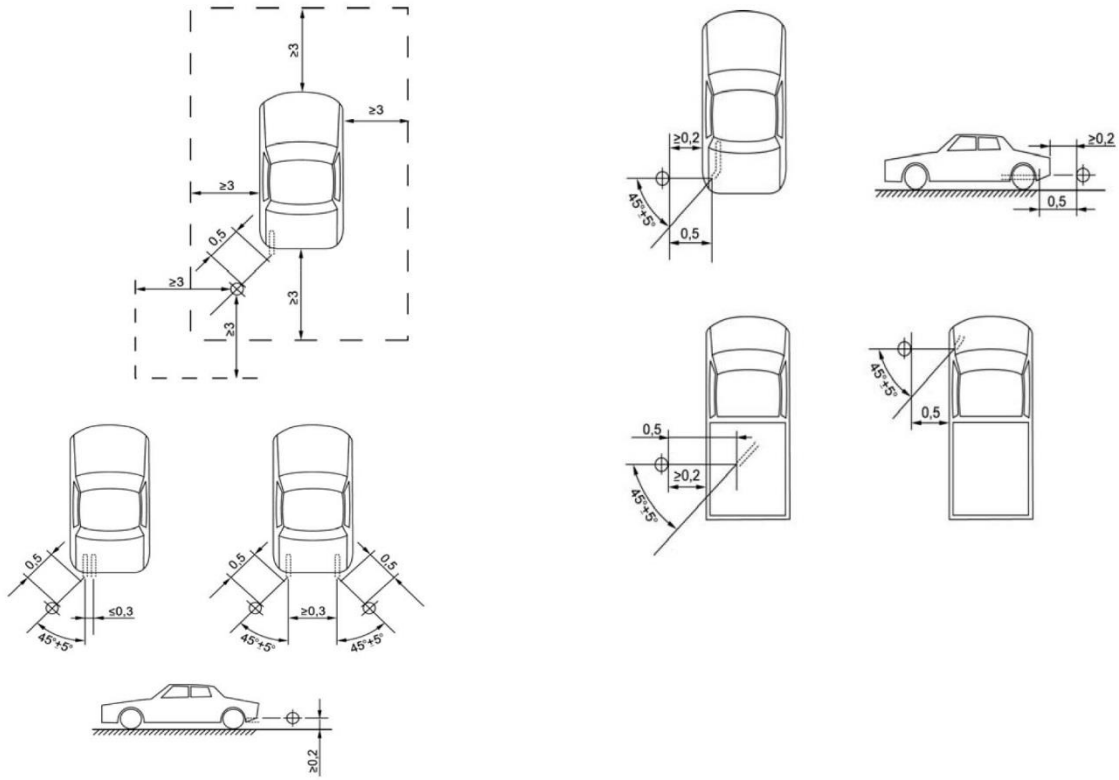

NOTE: Dimensions are in meters unless otherwise indicated.

Figure C-1. Noise-Level Testing for Motor Vehicles With Three or More Wheels

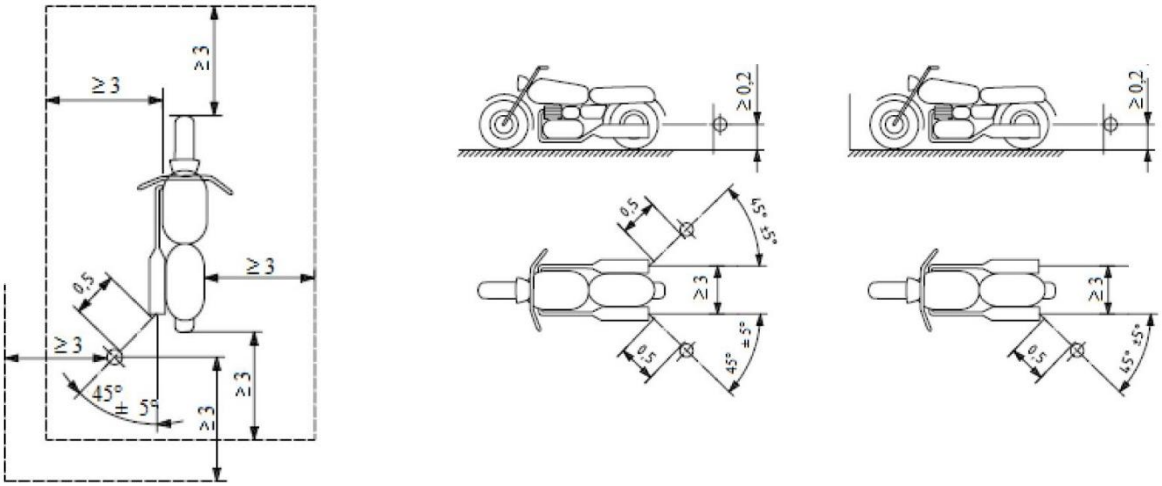

NOTE: Dimensions are in meters unless otherwise indicated.

Figure C-2. Measuring Distances for Stationary Motorcycles

Table C-2
Maximum Allowable Decibels

Vehicle Categories	Limit Values (dB(A))
Passenger vehicles capable of having not more than nine seats, including the driver's seat.	95
Passenger vehicles having more than nine seats, including the driver's seat, and a maximum authorized mass of more than 3.5 tons—	
With an engine power of less than 150 kW (ECE).	95
With an engine power of 150 kW (ECE) or above.	95
Passenger vehicles with more than nine seats, including the driver's seat; vehicles used for the carriage of goods—	
With a maximum authorized mass not exceeding 2 tons.	95
With a maximum authorized mass greater than 2 tons but not exceeding 3.5 tons.	95
Vehicles used to transport goods with a maximum authorized mass exceeding 3.5 tons—	
With an engine power of less than 75 kW (ECE).	95
With an engine power of 75 kW (ECE) or above but less than 150 kW (ECE).	95
With an engine power of 150 kW (ECE) or above.	95

Motorcycle Categories	Power-to-Mass Ratio (PMR)	Values (in dB(A))
First category	PMR ≤ 25	95
Second category	25 < PMR ≤ 50	95
Third category	PMR > 50	95

C-31. ENVIRONMENTAL EMISSIONS RESTRICTIONS ON CITY ACCESS

a. Article 40 of the *Bundesimmissionsschutzgesetz* (*BImSchG*) (German Environmental Emissions Law) authorizes German authorities to establish environmental zones in which driving motor vehicles without an appropriate environmental decal is prohibited. The decal certifies that the vehicle is manufactured to a standard that makes its emissions acceptable in those areas. The decal must be displayed on the lower right side of the windshield (opposite side from the driver).

b. Field registration offices (FRSs) provide initial-issue decals free of charge, but will charge a fee when issuing replacements for lost, damaged, or stolen decals. The FRS will issue these decals based on a determination by the POV inspector. The POV inspector will make appropriate entries on the Vehicle Mechanical Safety Inspection Record (AE Form 190-1H) in the "additional remarks" block.

c. The requirements in (1) through (7) below apply to cars, trucks, vans, campers, and recreational vehicles (RVs) with a loaded vehicle weight of up to 7,700 lb. Motorcycles, three-wheeled vehicles, quads, and Government vehicles are exempt from the requirement to display a decal. Noncompliance with emissions requirements will not be grounds for a vehicle to fail the vehicle mechanical inspection.

(1) Vehicles with diesel engines that are model years 1996 and older will not receive a decal (emission category 1).

(2) Vehicles with diesel engines that are model years 1997 to 2000 will receive a red decal (emission category 2).

(3) Vehicles with diesel engines that are model years 2001 to 2005 will receive a yellow decal (emission category 3).

(4) Vehicles with diesel engines that are model years 2006 and newer will receive a green decal (emission category 4).

(5) Vehicles with gasoline engines that are model years 1992 and older will not receive a decal (emission category 1).

(6) Vehicles with gasoline engines that are model years 1993 and newer will receive a green decal (emission category 4).

(7) POVs with diesel engines that do not meet the standards required to be in compliance with the emission requirements and those that have a rating lower than green (emission category 4) may be modified or converted to a higher standard at the owner's expense. POV owners who decide to do this must obtain the appropriate certification from a German Government-approved repair facility or from the authorized agencies that certify compliance (*TÜV*, *DEKRA*). When the owner provides proof in writing to the RMV that the vehicle has been modified or converted, the RMV will issue a new environmental decal that matches the certification provided. Vehicle-inspection stations do not issue environmental decals.

d. Emission categories for vehicles in excess of 7,700 lb loaded (for example, trucks, RVs) are as follows:

(1) Emission Category 1: Vehicles with diesel engines that are model years 1996 and older. These vehicles will not receive a decal.

(2) Emission Category 2: Vehicles with diesel engines that are model years 1997 to 2001. These vehicles will receive a red decal.

(3) Emission Category 3: Vehicles with diesel engines that are model years 2002 to 2006. These vehicles will receive a yellow decal.

(4) Emission Category 4: Vehicles with diesel engines that are model years 2007 and newer. These vehicles will receive a green decal.

APPENDIX D
INTERNAL CONTROLS, REVIEWS, AND AUDITS

D-1. PURPOSE
This appendix prescribes the essential elements of internal controls for driver testing stations (DTSs) and field registration stations (FRSs).

D-2. APPLICABILITY
This appendix applies to all Army and Air Force DTSs and FRSs.

D-3. RESPONSIBILITIES
United States Army garrison (USAG) commanders and USAFE/AFAFRICA mission support group (MSG) and logistics support group (LSG) commanders will—

a. Set up an adequate system for internal controls.

b. Provide supervision to ensure the continued operation of internal controls.

c. Review, evaluate, and update the internal control system to ensure its adequacy.

D-4. OBJECTIVES

a. Internal controls make up the plan of an organization and provide methods and measures adopted within an organization to—

(l) Safeguard its assets and information.

(2) Check the accuracy and reliability of its accounting and management information.

(3) Promote operational efficiency.

(4) Encourage adherence to prescribed managerial policy, laws, and regulations.

b. No amount of internal controls can absolutely prevent fraud and wrongdoing. An effective internal control system will produce an environment that ensures—

(1) Prescribed procedures are carried out.

(2) Changes in operating conditions are recognized.

(3) Corrective actions are taken when the system breaks down.

D-5. FRSs

a. Inspections must be conducted in accordance with the basic publication, paragraph 3-4, and appendix C.

b. The internal control system and application will be examined during technical inspections.

c. If an inspector detects fraud, mismanagement, or wrongdoing while inspecting FRS operations, the USAREUR Registry of Motor Vehicles (RMV) must be notified immediately. The RMV will send a written notice to the station commander through the USAG commander or USAFE/AFAFRICA MSG or LSG commander stating that deficiencies must be corrected within 60 calendar days or the station's operational certification will be withdrawn.

d. Within 60 calendar days after receiving the written notice (c above), the USAG commander or the USAFE/AFAFRICA MSG or LSG commander will—

(1) Evaluate the findings and recommendations reported by the inspector.

(2) Determine proper action in response to the inspector's findings and recommendations.

(3) Complete actions to correct deficiencies or resolve issues.

e. If deficiencies exist after reinspection, the FRS operational certification will be withdrawn.

D-6. INTERNAL CONTROL STANDARDS

USAG commanders and USAFE/AFAFRICA MSG and LSG commanders will ensure that—

a. All sensitive items (for example, license plates, validating stamps, testing material, documents, decals) are—

(1) Inventoried and reconciled monthly.

(2) Inventoried each year by a disinterested person in the grade of E7 or above.

(3) Accounted for at all times.

(4) Secured in a locked container after duty hours.

(5) Issued only with properly documented transactions and a receipt of fees (where applicable).

(6) Are sent only by registered mail.

b. Applications are completed and processed in accordance with this publication.

c. Applications and associated documents are sent to the RMV daily.

d. Daily fees are included with the automated AE Form 190-1AB and sent to the RMV daily.

e. POV registrations are computer-generated, not hand- or typewritten.

f. U.S. Forces POV driver tests are administered properly.

g. Information protected under the Privacy Act is released only to authorized persons.

h. Certificates of destruction are prepared and verified monthly.

APPENDIX E
PROCEDURES FOR DISPOSING OF UNWANTED POVs

E-1. APPLICABILITY

The policy and procedures in this appendix apply to U.S. Army units in Germany. Air Force Instruction (AFI) 31-204 provides policy and procedures for Air Force units, but customs policy and procedures established in AE Regulation 550-175/CNE-CNA-C6F Instruction 5840.1F/USAFE Instruction 51-702 for the disposal of abandoned and donated vehicles in Germany apply to both Services.

E-2. POLICY

a. U.S. Forces-registered privately owned vehicles (POVs) must be properly disposed of before the owner leaves Germany. This may be done in any of the following ways:

(1) Export (ship) the POV at Government or personal expense.

(2) Sell or give the POV to another person who has Status of Forces Agreement (SOFA) status with tax and customs privileges.

(3) Sell or give the POV to a person who does not have SOFA status with tax and customs privileges. Before selling or giving the vehicle away, customs clearance must be completed.

(4) Using AE Form 190-1Z, donate the vehicle to the local morale, welfare, and recreation (MWR) fund in accordance with paragraph E-5 and AR 215-1. MWR approving officials accept donations on an individual basis. When donating a POV, the registrant is responsible for delivering the POV to the appropriate person or facility.

(5) Using AE Form 190-1AD, appoint an agent to exercise any of the options in (1) through (4) above after the owner leaves. Only field registration stations (FRSs) are authorized to complete AE Form 190-1AD. Procedures for disposing of a POV by an agent are prescribed in paragraph 3-22 of the basic publication.

b. A POV must be operational (not registered as nonoperational) to be disposed of as described in a(2) above.

c. Registrants will properly dispose of their POVs before leaving Germany. POVs will not be abandoned. Registrants are responsible for delivering POVs to the appropriate person or facility when donating it. Abandoning a POV violates German law, this publication, and AE Regulation 600-1. Vehicle abandonment is punishable under the Uniform Code of Military Justice (UCMJ) and may serve as the basis for adverse administrative action. Registrants will clear POVs before departure in accordance with the guidance in paragraph 3-21 of the basic publication. Civilians who abandon a POV are in violation of civilian misconduct regulations, which may serve as the basis for adverse administrative action.

E-3. GERMAN CUSTOMS REQUIREMENTS

a. Under the customs provisions of the Supplementary Agreement to the NATO Status of Forces Agreement (SOFA), members of the U.S. Forces and their civilian component, Family members, and contractors may transfer goods in Germany to persons and organizations that are not members of the Force or its civilian component. The person or organization receiving the goods is responsible for meeting German customs obligations. Members of the Force and its civilian component, Family members, and contractors will not transfer POVs until the receiving person or organization has provided proof from the German customs authority that customs requirements have been met.

b. The disposal or sale of abandoned or donated vehicles to persons or organizations that do not have status under the NATO SOFA is not authorized without proper customs clearance. For customs purposes, abandoned and donated vehicles will be considered excess or surplus goods when they are transferred to a buyer who does not have status under the NATO SOFA.

E-4. ABANDONED VEHICLES

a. United States Army garrison (USAG) directors of emergency services (DESs) and USAFE/AFAFRICA chiefs, security forces (CSFs), will send all pertinent information about abandoned vehicles to the supporting chief customs inspector, who will send the information to the USAREUR Registry of Motor Vehicles (RMV). The information must be provided on a spreadsheet and sent electronically to the RMV so that the vehicles can be removed from the vehicle registry. The RMV will add information about the tax status of the vehicle to the spreadsheet (for example, information on how the vehicle was acquired (*Abwicklungsschein* (relief from value-added tax), AE Form 550-175A, bill of sale from German vendor)). This information will be used by German customs officials to assess taxes.

b. DESs and CSFs must maintain control of all abandoned vehicles. Usually abandoned vehicles will be kept in a lot or designated area. When such an area is not available, the chief customs inspector may approve placing vehicles in a German vendor’s lot until customs clearance has been completed. To make customs inspection of the vehicles more efficient, vehicles should be parked in a way so that they can be easily inspected and have a number on the windshield that corresponds to the number on the vehicle list. The hood of the vehicle should be raised or be able to be raised and the driver’s door must be able to be opened to verify the vehicle identification number (U.S. vehicles only). The DES or CSF should have a person on site to help with the inspection. DESs and CSFs are responsible for removing Government and personal property from vehicles before disposal.

c. If the German customs official has no concerns about the vehicles, the list will be released to the German customs official for determination of the taxes to be paid by buyers. The vehicles cannot be released to buyers until taxes are actually paid and verification to that effect is obtained from the German customs official. The German customs official will stamp the list and provide a copy to the buyer after he or she has paid the taxes. The chief customs inspector will keep a copy of the final vehicle list.

E-5. DONATED VEHICLES

a. MWR autocraft centers at most U.S. Forces installations in Germany allow Soldiers and other authorized customers to donate their POVs. These centers normally remove usable parts and sell the remainder of the vehicle to contracted commercial recycling operations. At some installations, these centers also claim abandoned vehicles and process these vehicles as if they were donated. USAGs in Germany must coordinate the disposal of donated vehicles with the area chief customs inspector before permitting any non-SOFA status entity or individual to take possession of a vehicle that is registered with the RMV.

b. The MWR director (or a designated representative) will—

(1) Complete and forward vehicle lists as explained in paragraph E-4.

(2) Enter a sales price for each vehicle and attach a copy of the bill of sale (if applicable) for each vehicle being disposed of.

(3) Ensure all Government and personal property is removed from vehicles before disposal.

c. The procedures in paragraph E-4 apply to donated vehicles. If an MWR center sells a donated vehicle, the list provided to the United States Forces Customs–Europe Chief Inspector must show the sales price, which should be verified by providing a copy of the bill of sale to German customs officials.

d. German customs officials will inspect donated vehicles at their discretion, collect any duties owed, and stamp the vehicle list when taxes have been paid by the vendor.

e. The procedures in subparagraphs c and d above do not apply when the MWR center sells vehicles as scrap metal using a nonappropriated fund (NAF) contract or when selling or disposing of donated vehicles through a NAF contract. In these situations, the MWR center will send a written request with all applicable details and a copy of the contract to the Customs Office, Office of the Provost Marshal (OPM), Office of the Chief of Staff, HQ USAREUR.

E-6. OTHER DISPOSITION METHODS

Paragraph 3-10 of the basic publication provides information about selling a POV to a person without SOFA status (AE Reg 600-700). If the transaction occurred outside of Germany (for example, Bulgaria, Hungary, Poland), an official bill of sale documenting the location of the sale and purchase information (vehicle and parties effecting the transaction) must be submitted to the FRS.

E-7. FAILURE TO PROPERLY DISPOSE OF A POV

If a registrant fails to dispose of a POV properly before departing, USAG commanders will process the vehicle as explained in paragraph E-10. USAFE/AFAFRICA mission support group (MSG) and logistics support group (LSG) commanders will follow the procedures in paragraph E-10 and the instructions in AFI 31-218IP.

E-8. RESPONSIBILITIES

a. USAG Commanders and USAFE/AFAFRICA MSG and LSG Commanders. USAG commanders and USAFE/AFAFRICA MSG and LSG commanders will—

(1) Ensure community clearance procedures require departing personnel to clear U.S. Forces-registered POVs in accordance with applicable Service directives.

(2) Designate a POC for administering a program to dispose of vehicles left by departing personnel.

(3) Appoint a disposal officer (c below) to process POVs of unknown status in accordance with paragraph E-10.

(4) Appoint a board of officers (d below) to process POVs that the disposal officer determines abandoned.

(5) Designate a secure holding lot to store POVs being processed for disposal. If the same agency is responsible for controlling the community nonoperational, impoundment, and holding lots, POVs may be stored in the same secure area as long as they are appropriately identified. MWR strip-lots may not be used as holding lots.

b. DESs and CSFs. DESs and CSFs will—

(1) Provide physical-security support to holding lots where POVs are stored pending disposition.

(2) Provide information on the last known owners of POVs to the board of officers (d below).

(3) Prepare DA Form 3975 on POVs moved to holding lots for disposal.

c. Disposal Officer. A disposal officer is a commissioned officer, a noncommissioned officer in the grade of E7 or above, or a U.S. civilian in the grade of GS-6 or above, appointed by a USAG commander or a USAFE/AFAFRICA MSG or LSG commander. Disposal officers will—

(1) Examine and inventory the condition of each POV entering the holding lot. Photographs of all four sides may be used for this purpose.

(2) Determine the POV owner's identity and process the POV as explained in paragraph E-10.

(3) Act on telephonic requests from lienholders to delay processing to the Defense Reutilization and Marketing Region–Europe (DRMR-E) fund.

(4) Maintain records of actions taken on each vehicle for 2 years after disposition.

d. Board of Officers. A board of officers will comprise one or more commissioned officers, noncommissioned officers, or civilian employees appointed by a USAG commander or a USAFE/AFAFRICA MSG or LSG commander to process abandoned POVs. According to DOD 4160.21-M, the board will—

(1) Ensure the disposal officer made diligent inquiries to determine and locate a POV owner or an owner's heirs, next of kin, or legal representative.

(2) Conduct an inventory of an abandoned vehicle, including its estimated current fair-market value. The inventory will be in writing and dated by the board.

(3) Process vehicles for DRMR-E disposal in accordance with paragraph E-10e.

E-9. CLEARANCE PROCEDURES

Departing personnel will—

a. Clear through the FRS in accordance with the basic publication, paragraph 3-21, and this appendix.

b. Provide documentation to prove that their U.S. Forces-registered POVs have been properly disposed of in accordance with this appendix or that an agent has been appointed in accordance with paragraph 3-22 of the basic publication.

E-10. PROCEDURES FOR POV DISPOSAL

a. Identification. If circumstances indicate that a POV has been stationary for an extended period or the license plates or other evidence of ownership are missing, persons designated by the community POC for POV disposal will—

(1) Attach DD Form 2504 or AE Form 190-1AS to the POV. DD Form 2504 and AE Form 190-1AS inform the owner that the POV will be towed to a specified holding lot if not moved within 24 hours.

(2) If the POV has not been moved within 24 hours after notifying the owner, complete a condition inventory and move the POV to the community holding lot.

(3) File DA Form 3975.

b. Determining Status and Ownership. The disposal officer (para E-8c) will do the following for POVs moved to the community holding lot:

(1) Access the Vehicle Registry Information Network (VERINET) and enter the chassis number or, if available, the license number to determine ownership. If VERINET is not available, the disposal officer will contact the USAREUR Registry of Motor Vehicles (RMV) with the chassis or license number to determine the identity of the last known registrant.

(2) If the owner or agent is identified, determine—

(a) The owner's or agent's status and location.

(b) Whether an agent has been appointed to dispose of the vehicle (basic pub, para 3-22).

(c) Whether there is a lien on the vehicle.

c. Procedures When the Owner is Determined.

(1) Notification of Owner in the Command.

(a) If the owner is temporarily absent, do not process the POV for disposal.

(b) If the owner is determined to be in the command, the disposal officer will contact the owner's commander and inform the commander that he or she must take administrative action (basic pub, paragraphs 2-14b(4)(d) and 3-23a(4)) and possibly punitive action (AE Reg 600-1) against the owner.

(2) Notification of Absent Owner. If the owner is no longer in the command, the disposal officer will notify the owner by certified mail (return-receipt requested) that the POV has been found and will be turned over to the DRMR-E unless other instructions are received within 45 calendar days. Figure E-1 shows the format for the notification letter.

(3) Notification to Lienholder. If RMV records indicate a lien on the vehicle of an absent owner, the disposal officer will send a copy of the notification letter ((2) above and fig E-1) to the lienholder.

(4) Disposal.

(a) If no disposition instructions are received from the owner or lienholder within 45 calendar days after the date the notification letter was mailed, the vehicle will be turned over to the MWR strip-lot. The disposal officer will get a receipt.

(b) If the owner replies with disposition instructions permitted by the basic publication, the vehicle will be disposed of immediately according to those instructions.

(c) If the local director of logistics (DOL) disposes of the POV, he or she must notify the RMV of the disposal by providing the make, chassis number, and color of the POV; the name of the disposal agency; and, if known, the license-plate number and the name of the owner.

d. Procedures When the Owner is not Determined. If the disposal officer cannot determine the owner of a POV, the POV will be treated as an abandoned vehicle and disposed of in accordance with United States Code, Title 10, section 2575, and DOD 4160.21-M.

(1) If the board of officers (para E-8d) determines that the POV's fair market value is under $300, the POV may be released to DRMR-E for disposal.

(2) If the board of officers (para E-8d) determines that the POV's fair market value is $300 or more, the POV must be held for 45 calendar days from the date it was placed in the holding lot. During this time, the board will post a notice of the vehicle's intended disposition in the community bulletin for at least 1 month. At the end of the 45-day period, the vehicle may be released to the DRMR-E for disposal.

(3) If the local DOL disposes of the POV, he or she must notify the RMV of the disposal by providing the make, chassis number, and color of the POV; the name of the disposal agency; and, if known, the license-plate number and the name of the owner.

e. Procedures for Disposal through DRMR-E.

(1) DRMR-E will first try to dispose of abandoned and unclaimed POVs (glossary) through onsite sales.

Unit Letterhead

Office symbol *Date*

MEMORANDUM FOR *Name of POV Owner*

SUBJECT: Notification on Disposition of Privately Owned Vehicle

1. Our records show that you are the owner of a (*description of the vehicle, including serial number, motor number, year, make, and any other details considered necessary*). This vehicle has been found at *location* and is now in the custody of *name, address, and telephone number of the disposal officer*.

2. In accordance with AE Regulation 190-1/CNE-CNA-C6F Instruction 11240.6Y/USAFE Instruction 31-202 and your instructions on AE Form 190-1AA, the vehicle described above will be given to the *name of community* morale, welfare, and recreation fund strip-lot on *date.* (**NOTE:** The date provided must be no later than 45 calendar days after the date this memorandum is mailed.)

3. If you desire an alternative disposition, you must notify me no later than (*the date specified in para 2 above*). Only disposition instructions permitted by AE Regulation 190-1/CNE-CNA-C6F Instruction 11240.6Y/USAFE Instruction 31-202 will be honored. Notification received after the date specified above will be honored only if disposition has not yet been made.

4. If there is a lien on this vehicle, it is your responsibility to inform the lienholder of the intended disposition of the vehicle. Requests from lienholders to delay disposal procedures pending repossession will be honored.

(*Signature block of disposal officer*)

CF:
(*lienholder, if appropriate*)

Figure E-1. Format for a Notification Letter to the Owner of a Found POV

(2) For POVs that cannot be disposed of through onsite sales, USAGs must provide a military interdepartmental purchase request (MIPR) to cover the disposal costs.

(a) Funding for the cost of disposing of an abandoned POV will be provided by the USAG base operations supply account.

(b) Funding for the cost of disposing an unclaimed POV will be provided by the operating funds of the unit to which the owner is or was assigned.

E-11. REPOSSESSION BY LIENHOLDER

a. When repossessing an abandoned POV, the lienholder must—

(1) Provide evidence of ownership to the U.S. releasing authority.

(2) Send written notification of repossession to the Registrar at USAREUR RMV, Unit 29230, APO AE 09136-9230. The notification must include the name of the person who had the loan and the circumstances of the POV's abandonment.

b. U.S. financial institutions operating in Germany must register repossessed POVs immediately on repossession and must turn in the license plates and a copy of the repossession memorandum (a(2) above) to any FRS and pay the current fee for having the vehicle transferred to the lienholder.

c. Lienholders who are not eligible to register POVs with the U.S. Forces must comply with customs-clearance requirements. Before transferring or disposing of the POV, the U.S. Forces-provided license plates and all U.S. Forces decals must be removed and turned in to the local field registration station, military police station, or security forces station.

APPENDIX F
SUMMARY OF RESPONSIBILITIES OF COMMANDERS AND SUPERVISORS

Table F-1 summarizes responsibilities for commanders and supervisors; it also refers to prescribing paragraphs in the basic publication and other appendixes. This summary does not relieve commanders and supervisors of the need to establish specific administrative procedures to ensure actions are carried out properly. The glossary explains abbreviations used in the table.

Table F-1
Commander and Supervisor Responsibilities

Responsibility	Paragraph/ Appendix
Take appropriate corrective action when a subordinate fails to comply with this publication.	1-4f, 2-12b
Counsel and provide a written statement for a subordinate who has been declared ineligible for a U.S. Forces certificate of license or whose driving privileges have been suspended or revoked.	2-12b
Advise the suspending authority when a subordinate has accumulated 12 or more traffic points in 1 year or 18 points in 2 years.	2-14b(4)(b)
Notify the DES or CSF when a subordinate's U.S. Forces POV driving privileges have been suspended or revoked.	2-17b
Confiscate the U.S. Forces certificate of license and send it through the local DES or CSF to the RMV when a subordinate's driving privileges are revoked by the RMV. Commanders will hold suspended licenses until the end of the suspension period and return the license to the operator at the end of the suspension period.	2-17b and c
Maintain DA Form 3626 for each subordinate holding a valid U.S. Forces certificate of license and POV registration.	2-22
Ensure that first-line supervisors or platoon sergeants visually inspect the POVs of subordinates at least every 180 calendar days and that identified deficiencies are corrected.	3-3c
Ensure that a subordinate does not operate a POV when his or her POV registration has been canceled. Contact the MP or SF station for them to remove canceled license plates from the POV and return them to the RMV.	3-12c
Be the approval authority for applications for racing vehicles (AE Form 190-1AA) regardless of an applicant's grade.	3-24a(1)
Ensure subordinates—	
a. Have a valid U.S. Forces Certificate of License for the class of POV registered (except for nonoperational POVs).	2-1a
b. Notify the FRS when personal or vehicle information changes.	2-8, 3-13
c. Have their POVs inspected at least once every 2 years if the POVs are less than 10 years old, and once a year if their POVs are more than 10 years old. POVs should also be inspected when there is doubt that they still meet mechanical standards.	3-4f and g
d. Have proof of ownership and valid insurance when applying for POV registration.	3-5
e. Maintain proper registration and insurance for POVs.	3-5
f. Properly display U.S. Forces-provided POV license plates.	3-18b
g. Provide satisfactory evidence of proper clearance for their POVs.	3-21
h. Promptly and properly dispose of unwanted POVs.	app E

APPENDIX G
SUMMARY OF SUSPENDING, REVOKING, AND APPELLATE AUTHORITY RESPONSIBILITIES

G-1. GENERAL

a. USAFE/AFAFRICA personnel will refer to Air Force Instruction 31-204 for actions requiring administrative due process.

b. Tables G-1 through G-3 list responsibilities of suspending, revoking, and appellate authorities, referring to the prescribing paragraphs in the basic publication. The position of the suspending, revoking, or appellate authority must be as close as possible in the chain of command to the licensee. The glossary defines suspending, revoking, and appellate authorities.

c. This appendix is not intended to relieve authorities of the need to establish specific administrative procedures to ensure responsibilities are carried out properly.

G-2. SUSPENDING AUTHORITY
Table G-1 lists actions to be taken by suspending authorities.

G-3. REVOKING AUTHORITY
Table G-2 lists actions to be taken by revoking authorities.

G-4. APPELLATE AUTHORITY
Table G-3 lists actions to be taken by appellate authorities.

Table G-1
Suspending Authority Responsibilities

Responsibility	Paragraph
Investigate accidents or incidents of misconduct and suspend driving privileges when appropriate.	2-14
The following are the two categories of suspensions:	
a. Discretionary.	
(1) Suspend for an appropriate period of time.	2-14a(1) through (4)
(2) Suspend for periods not to exceed 180 calendar days or 1 year.	2-14a(3) and (4)
b. Mandatory.	
(1) Suspend for periods of 7, 30, 90, or 180 calendar days.	2-14b
(2) Suspend for periods required by civil authorities, whichever is stricter.	2-16
Review rebuttals and notify the Registry of Motor Vehicles when appropriate.	2-18
Review licensee appeals to adverse actions and send rebuttals to the revoking authority.	2-18, 2-19
Assess traffic points.	2-21
Withdraw registration privileges.	3-23

Table G-2
Revoking Authority Responsibilities

Responsibility	Paragraph
Declare a person ineligible for AE Form 190-1F for the period of time noted for offenses.	2-13
Revoke driving privileges indefinitely, with petition to reinstate authorized only after—	
a. 1 year or until civil authorities reinstate permission to drive, whichever is later.	2-15a, 2-16
b. 5 years or until civil authorities reinstate permission to drive, whichever is later.	2-15b, 2-16
Review adverse actions against personnel in the revoking authority's chain of command. If adverse action is taken, DA Form 4833, AE Form 190-1AX, or AE Form 190-1K must be completed, signed, and sent through the local director of emergency services or chief, security forces, to the USAREUR Registry of Motor Vehicles.	2-17
Review petitions for reinstatement of revoked U.S. Forces Certificates of License.	2-20

Table G-3
Appellate Authority Responsibilities

Responsibility	Paragraph
Inform licensees whose driving privileges have been either suspended or revoked, based on the action or request of civil authorities, that such decisions are final.	2-16
Rule on appeals of adverse actions taken by revoking authorities.	2-19
Rule on appeals of actions to withdraw registration privileges.	3-23c
Establish, with the revoking and suspending authorities, administrative procedures for ensuring appropriate action is taken against violators of this publication.	G-1c above

APPENDIX H
SUMMARY OF RESPONSIBILITIES OF GARRISON DIRECTORS OF EMERGENCY SERVICES AND CHIEFS, SECURITY FORCES

Table H-1 summarizes responsibilities of garrison directors of emergency services (DESs) and chiefs, security forces (CSFs), and refers to prescribing paragraphs in the basic publication and other appendixes.

Table H-1
DES and CSF Responsibilities

Responsibility	Paragraph/ Appendix
Confiscate an individual's AE Form 190-1F at the time of detention or apprehension for operating a privately owned vehicle (POV) with a blood-alcohol content (BAC) over .05 grams of alcohol to 100 milliliters of whole blood or for refusing to submit to a chemical test. Confiscated licenses will be turned over immediately to the individual's commander pending resolution. Appendix J, table J-1, converts German breath-alcohol levels into U.S. blood-alcohol levels.	2-14, 2-15
Review DA Form 4833, AE Form 190-1AX, or AE Form 190-1K for appropriateness and send completed forms to the Registry of Motor Vehicles (RMV).	2-17b
Assess traffic points when a response is not received from a commander or supervisor within 60 calendar days after receipt of DA Form 3946, DA Form 3975, or AE Form 190-1AX.	2-17b, 2-22b
Monitor hours of operation for people with restricted driving privileges.	2-20d(1)
Deny operational registration privileges up to 60 calendar days when temporary plates are not returned on the specified date.	3-7f
Confiscate license plates on notification that the POV registration has been canceled because of lack of insurance or when notified by the RMV to pick up the license plates.	3-12c
Remove license plates that are defaced, altered, or forged.	3-18b(6)(a)
Act on reports of lost, stolen, or recovered POVs or license plates.	app K

APPENDIX I
U.S. FORCES CERTIFICATE OF LICENSE AND MOTOR-VEHICLE CLASSIFICATION SUMMARY

I-1. GENERAL
This appendix lists requirements for the different classes of privately owned vehicles (POVs). Individuals with a suspended or revoked U.S. Forces Certificate of License (AE Form 190-1F) will not operate any class of vehicle until their suspended or revoked license is reinstated.

I-2. CLASSES OF VEHICLES
Vehicle classes are defined as follows:

a. Class 1. Motorcycles with or without a side car and an engine capacity exceeding 250 cubic centimeters (cc) (equals German class A).

b. Class 1a. Motorcycles with a power rating of no more than 35 kilowatts (kW) and a power-to-weight ratio not exceeding 0.2 kW/kilogram (kg) (equals German classes A and A2).

c. Class 1b. Motorcycles with an engine size of no more than 125 cc and a power rating not exceeding 11 kW. The power-to-weight ratio may not exceed 0.1 kW/kg (equals German class A1).

d. Class 2. Vehicles with more than 15 seats (excluding the driver's seat), trucks with a total weight in excess of 7.5 metric tons, trucks with trailers, POVs with trailers weighing more than 7.5 tons, three-axle vehicles, and double-axle trailers (equals German classes C, CE, D, and DE).

NOTE: Under German law, trailer axles not more than 1 meter apart are considered one axle.

e. Class 3. All vehicles other than classes 1, 1a, 1b, 2, 4, and 5 (equals German classes B, BE, C1, D1, and D1E).

f. Class 4. Motorcycles with an engine capacity of no more than 50 cc and a speed not exceeding 50 kph (31 mph) (equals German class AM).

g. Class 5. Motorcycles with an engine capacity of less than 50 cc and a speed not exceeding 25 kph (16 mph) (equals German class M).

I-3. REQUIREMENTS FOR U.S. FORCES CERTIFICATE OF LICENSE
Table I-1 lists classes of vehicles and requirements for obtaining a U.S. Forces Certificate of License.

Table I-1
U.S. Forces Certificate of License Requirements

	Class 1 (note 1)	Class 1a (note 1)	Class 1b (notes 1, 2, & 8)	Class 2 (note 1)	Class 3 (note 1)	Class 4 (note 2)	Class 5 (note 2)
Minimum age to operate (note 3)	18 years	18 years	16 years	21 years	17 years	16 years	15 years
U.S. Forces Certificate of License required	Yes (note 4)	Yes (note 4)	Yes (note 4)	Yes	Yes	Yes (note 4)	Yes
U.S. Forces registration required (AE Form 190-1A)	Yes	Yes	Yes	Yes	Yes	No (note 5)	No (note 5)
U.S. Forces-issued license plates required	Yes	Yes	Yes	Yes	Yes	No (note 6)	No (note 6)
Insurance plates required	NA	NA	NA	NA	NA	Yes (note 5)	Yes (note 5)
Protective helmets/eye protection required (note 7)	Yes	Yes	Yes	NA	NA	Yes	Yes

NOTES: 1. Family members may register class 1, 1a, 1b, 2, and 3 vehicles with German or U.S. Forces authorities. Family members who choose to register a POV with German authorities may obtain a German drivers license if they desire.

2. Mopeds may be classified as class 1b, 4, or 5, depending on the motor size or speed capacity.

3. The minimum age to obtain a U.S. Forces certificate of license is—

15 years for class 5.
16 years for classes 1b and 4.
17 years for class 3 (The applicant must have a valid country or State drivers license for class 3.)
18 years for class 1 and 1a.
21 years for class 2.

4. Individuals with a class 1, 1a, or lb license may operate class 4 and 5 vehicles. Individuals with a class 4 license may operate class 5 vehicles. Proof of having attended the 4-hour motorcycle orientation course and, if required, German certification for Army military and civilian personnel and their Family members are prerequisites to obtaining a U.S. Forces Certificate of License for this class.

5. Registration documents are prepared and provided by German insurance companies.

6. Individuals with class 4 and 5 vehicles will have them mechanically inspected at a U.S. Forces POV inspection station and have AE Form 190-1I in their possession when operating the vehicle.

7. Approved motorcycle protective equipment is defined in the glossary.

8. Individuals under 25 years of age who apply for a German class 1a license must wait 2 years before they can progress to a class 1 license. Individuals must show proof of having operated a class 1b motorcycle for 4,000 kilometers.

APPENDIX J
BREATH- AND BLOOD-ALCOHOL-LEVEL EQUIVALENTS

The German police breathalyzer measures breath-alcohol concentration in milligrams per liter (mg/L). The United States measures blood-alcohol levels in grams per 100 milliliters (g/100 mL). Table J-1 converts German breath-alcohol levels into U.S. blood-alcohol levels applying a 2100:1 blood/breath ratio.

Table J-1
Breath- and Blood-Alcohol-Level Equivalents

Breath-Alcohol Level	Blood-Alcohol Level	Breath-Alcohol Level	Blood-Alcohol Level	Breath-Alcohol Level	Blood-Alcohol Level
0.01	0.0021	0.30	0.0630	0.59	0.1239
0.02	0.0042	0.31	0.0651	0.60	0.1260
0.03	0.0063	0.32	0.0672	0.61	0.1281
0.04	0.0084	0.33	0.0693	0.62	0.1302
0.05	0.0105	0.34	0.0714	0.63	0.1323
0.06	0.0126	0.35	0.0735	0.64	0.1344
0.07	0.0147	0.36	0.0756	0.65	0.1365
0.08	0.0168	0.37	0.0777	0.66	0.1386
0.09	0.0189	0.38	0.0798	0.67	0.1407
0.10	0.0210	0.39	0.0819	0.68	0.1428
0.11	0.0231	0.40	0.0840	0.69	0.1449
0.12	0.0252	0.41	0.0861	0.70	0.1470
0.13	0.0273	0.42	0.0882	0.71	0.1491
0.14	0.0294	0.43	0.0903	0.72	0.1512
0.15	0.0315	0.44	0.0924	0.73	0.1533
0.16	0.0336	0.45	0.0945	0.74	0.1554
0.17	0.0357	0.46	0.0966	0.75	0.1575
0.18	0.0378	0.47	0.0987	0.76	0.1596
0.19	0.0399	0.48	0.1008	0.77	0.1617
0.20	0.0420	0.49	0.1029	0.78	0.1638
0.21	0.0441	0.50	0.1050	0.79	0.1659
0.22	0.0462	0.51	0.1071	0.80	0.1680
0.23	0.0483	0.52	0.1092	0.81	0.1701
0.24	0.0504	0.53	0.1113	0.82	0.1722
0.25	0.0525	0.54	0.1134	0.83	0.1743
0.26	0.0546	0.55	0.1155	0.84	0.1764
0.27	0.0567	0.56	0.1176	0.85	0.1785
0.28	0.0588	0.57	0.1197	0.86	0.1806
0.29	0.0609	0.58	0.1218	0.87	0.1827

Table J-1
Breath- and Blood-Alcohol-Level Equivalents—Continued

Breath-Alcohol Level	Blood-Alcohol Level	Breath-Alcohol Level	Blood-Alcohol Level	Breath-Alcohol Level	Blood-Alcohol Level
0.88	0.1848	1.23	0.2583	1.58	0.3318
0.89	0.1869	1.24	0.2604	1.59	0.3339
0.90	0.1890	1.25	0.2625	1.60	0.3360
0.91	0.1911	1.26	0.2646	1.61	0.3381
0.92	0.1932	1.27	0.2667	1.62	0.3402
0.93	0.1953	1.28	0.2688	1.63	0.3423
0.94	0.1974	1.29	0.2709	1.64	0.3444
0.95	0.1995	1.30	0.2730	1.65	0.3465
0.96	0.2016	1.31	0.2751	1.66	0.3486
0.97	0.2037	1.32	0.2772	1.67	0.3507
0.98	0.2058	1.33	0.2793	1.68	0.3528
0.99	0.2079	1.34	0.2814	1.69	0.3549
1.00	0.2100	1.35	0.2835	1.70	0.3570
1.01	0.2121	1.36	0.2856	1.71	0.3591
1.02	0.2142	1.37	0.2877	1.72	0.3612
1.03	0.2163	1.38	0.2898	1.73	0.3633
1.04	0.2184	1.39	0.2919	1.74	0.3654
1.05	0.2205	1.40	0.2940	1.75	0.3675
1.06	0.2226	1.41	0.2961	1.76	0.3696
1.07	0.2247	1.42	0.2982	1.77	0.3717
1.08	0.2268	1.43	0.3003	1.78	0.3738
1.09	0.2289	1.44	0.3024	1.79	0.3759
1.10	0.2310	1.45	0.3045	1.80	0.3780
1.11	0.2331	1.46	0.3066	1.81	0.3801
1.12	0.2352	1.47	0.3087	1.82	0.3822
1.13	0.2373	1.48	0.3108	1.83	0.3843
1.14	0.2394	1.49	0.3129	1.84	0.3864
1.15	0.2415	1.50	0.3150	1.85	0.3885
1.16	0.2436	1.51	0.3171	1.86	0.3906
1.17	0.2457	1.52	0.3192	1.87	0.3927
1.18	0.2478	1.53	0.3213	1.88	0.3948
1.19	0.2499	1.54	0.3234	1.89	0.3969
1.20	0.2520	1.55	0.3255	1.90	0.3990
1.21	0.2541	1.56	0.3276	1.91	0.4011
1.22	0.2562	1.57	0.3297	1.92	0.4032

Table J-1
Breath- and Blood-Alcohol-Level Equivalents—Continued

Breath-Alcohol Level	Blood-Alcohol Level	Breath-Alcohol Level	Blood-Alcohol Level	Breath-Alcohol Level	Blood-Alcohol Level
1.93	0.4053	2.28	0.4788	2.63	0.5523
1.94	0.4074	2.29	0.4809	2.64	0.5544
1.95	0.4095	2.30	0.4830	2.65	0.5565
1.96	0.4116	2.31	0.4851	2.66	0.5586
1.97	0.4137	2.32	0.4872	2.67	0.5607
1.98	0.4158	2.33	0.4893	2.68	0.5628
1.99	0.4179	2.34	0.4914	2.69	0.5649
2.00	0.4200	2.35	0.4935	2.70	0.5670
2.01	0.4221	2.36	0.4956	2.71	0.5691
2.02	0.4242	2.37	0.4977	2.72	0.5712
2.03	0.4263	2.38	0.4998	2.73	0.5733
2.04	0.4284	2.39	0.5019	2.74	0.5754
2.05	0.4305	2.40	0.5040	2.75	0.5775
2.06	0.4326	2.41	0.5061	2.76	0.5796
2.07	0.4347	2.42	0.5082	2.77	0.5817
2.08	0.4368	2.43	0.5103	2.78	0.5838
2.09	0.4389	2.44	0.5124	2.79	0.5859
2.10	0.4410	2.45	0.5145	2.80	0.5880
2.11	0.4431	2.46	0.5166	2.81	0.5901
2.12	0.4452	2.47	0.5187	2.82	0.5922
2.12	0.4452	2.48	0.5208	2.83	0.5943
2.14	0.4494	2.49	0.5229	2.84	0.5964
2.15	0.4515	2.50	0.5250	2.85	0.5985
2.16	0.4536	2.51	0.5271	2.86	0.6006
2.17	0.4557	2.52	0.5292	2.87	0.6027
2.18	0.4578	2.53	0.5313	2.88	0.6048
2.19	0.4599	2.54	0.5334	2.89	0.6069
2.20	0.4620	2.55	0.5355	2.90	0.6090
2.21	0.4641	2.56	0.5376	2.91	0.6111
2.22	0.4662	2.57	0.5397	2.92	0.6132
2.23	0.4683	2.58	0.5418	2.93	0.6153
2.24	0.4704	2.59	0.5439	2.94	0.6174
2.25	0.4725	2.60	0.5460	2.95	0.6195
2.26	0.4746	2.61	0.5481	2.96	0.6216
2.27	0.4767	2.62	0.5502	2.97	0.6237

Table J-1
Breath- and Blood-Alcohol-Level Equivalents—Continued

Breath-Alcohol Level	Blood-Alcohol Level	Breath-Alcohol Level	Blood-Alcohol Level	Breath-Alcohol Level	Blood-Alcohol Level
2.98	0.6258	3.33	0.6993	3.68	0.7728
2.99	0.6279	3.34	0.7014	3.69	0.7749
3.00	0.6300	3.35	0.7035	3.70	0.7770
3.01	0.6321	3.36	0.7056	3.71	0.7791
3.02	0.6342	3.37	0.7077	3.72	0.7812
3.03	0.6363	3.38	0.7098	3.73	0.7833
3.04	0.6384	3.39	0.7119	3.74	0.7854
3.05	0.6405	3.40	0.7140	3.75	0.7875
3.06	0.6426	3.41	0.7161	3.76	0.7896
3.07	0.6447	3.42	0.7182	3.77	0.7917
3.08	0.6468	3.43	0.7203	3.78	0.7938
3.09	0.6489	3.44	0.7224	3.79	0.7959
3.10	0.6510	3.45	0.7245	3.80	0.7980
3.11	0.6531	3.46	0.7266	3.81	0.8001
3.12	0.6552	3.47	0.7287	3.82	0.8022
3.13	0.6573	3.48	0.7308	3.83	0.8043
3.14	0.6594	3.49	0.7329	3.84	0.8064
3.15	0.6615	3.50	0.7350	3.85	0.8085
3.16	0.6636	3.51	0.7371	3.86	0.8106
3.17	0.6657	3.52	0.7392	3.87	0.8127
3.18	0.6678	3.53	0.7413	3.88	0.8148
3.19	0.6699	3.54	0.7434	3.89	0.8169
3.20	0.6720	3.55	0.7455	3.90	0.8190
3.21	0.6741	3.56	0.7476	3.91	0.8211
3.22	0.6762	3.57	0.7497	3.92	0.8232
3.23	0.6783	3.58	0.7518	3.93	0.8253
3.24	0.6804	3.59	0.7539	3.94	0.8274
3.25	0.6825	3.60	0.7560	3.95	0.8295
3.26	0.6846	3.61	0.7581	3.96	0.8316
3.27	0.6867	3.62	0.7602	3.97	0.8337
3.28	0.6888	3.63	0.7623	3.98	0.8358
3.29	0.6909	3.64	0.7644	3.99	0.8379
3.30	0.6930	3.65	0.7665	4.00	0.8400
3.31	0.6951	3.66	0.7686	4.01	0.8421
3.32	0.6972	3.67	0.7707	4.02	0.8442

Table J-1
Breath- and Blood-Alcohol-Level Equivalents—Continued

Breath-Alcohol Level	Blood-Alcohol Level	Breath-Alcohol Level	Blood-Alcohol Level	Breath-Alcohol Level	Blood-Alcohol Level
4.03	0.8463	4.36	0.9156	4.69	0.9849
4.04	0.8484	4.37	0.9177	4.70	0.9870
4.05	0.8505	4.38	0.9198	4.71	0.9891
4.06	0.8526	4.39	0.9219	4.72	0.9912
4.07	0.8547	4.40	0.9240	4.73	0.9933
4.08	0.8568	4.41	0.9261	4.74	0.9954
4.09	0.8589	4.42	0.9282	4.75	0.9975
4.10	0.8610	4.43	0.9303	4.76	0.9996
4.11	0.8631	4.44	0.9324	4.77	1.0017
4.12	0.8652	4.45	0.9345	4.78	1.0038
4.13	0.8673	4.46	0.9366	4.79	1.0059
4.14	0.8694	4.47	0.9387	4.80	1.0080
4.15	0.8715	4.48	0.9408	4.81	1.0101
4.16	0.8736	4.49	0.9429	4.82	1.0122
4.17	0.8757	4.50	0.9450	4.83	1.0143
4.18	0.8778	4.51	0.9471	4.84	1.0164
4.19	0.8799	4.52	0.9492	4.85	1.0185
4.20	0.8820	4.53	0.9513	4.86	1.0206
4.21	0.8841	4.54	0.9534	4.87	1.0227
4.22	0.8862	4.55	0.9555	4.88	1.0248
4.23	0.8883	4.56	0.9576	4.89	1.0269
4.24	0.8904	4.57	0.9597	4.90	1.0290
4.25	0.8925	4.58	0.9618	4.91	1.0311
4.26	0.8946	4.59	0.9639	4.92	1.0332
4.27	0.8967	4.60	0.9660	4.93	1.0353
4.28	0.8988	4.61	0.9681	4.94	1.0374
4.29	0.9009	4.62	0.9702	4.95	1.0395
4.30	0.9030	4.63	0.9723	4.96	1.0416
4.31	0.9051	4.64	0.9744	4.97	1.0437
4.32	0.9072	4.65	0.9765	4.98	1.0458
4.33	0.9093	4.66	0.9786	4.99	1.0479
4.34	0.9114	4.67	0.9807	5.00	1.0500
4.35	0.9135	4.68	0.9828		

APPENDIX K
REPORTING LOST, STOLEN, OR RECOVERED POVs AND LICENSE PLATES

K-1. GENERAL

This appendix prescribes procedures for—

a. Receiving and recording lost, stolen, or recovered privately owned vehicles (POVs) and license plates.

b. Informing applicable agencies of the actions in subparagraph a above.

K-2. STOLEN POVs AND LOST OR STOLEN LICENSE PLATES

a. If any vehicle registered by the U.S. Forces in Germany is lost or stolen, or one or both license plates are lost, stolen, or recovered, the owner will immediately report to the nearest military police (MP) or security forces (SF) station. POVs in nonoperational status will be reported by chassis number.

b. When MP or SF stations are not near the scene of the incident, the owner will notify local civilian authorities. The owner will report the incident to the nearest MP or SF station within 24 hours after returning to his or her duty station.

c. The MP or SF will report thefts, losses, and recoveries by completing AE Form 190-1AU. If one or more license plates are missing, an MP or SF official will determine who is responsible for the loss of the plates and indicate the determination in the Remarks block (block 15) on AE Form 190-1AU. AE Form 190-1AU will be kept in local MP or SF files. A copy of the form will be immediately provided to the nearest German police station or given to the attached German police liaison officer, if available.

d. MP and SF stations will immediately notify the USAREUR Registry of Motor Vehicles (RMV) of any thefts, losses, or recoveries by providing the information on AE Form 190-1AU by telephone. The RMV will then provide MP and SF stations the corresponding vehicle-registration numbers.

K-3. RECOVERED VEHICLES AND LICENSE PLATES

a. Recovered vehicles and license plates will be reported the same way as stolen vehicles and lost or stolen license plates (para K-2).

b. U.S. Forces-issued license plates (if any) that remained on a recovered vehicle must be turned in immediately to the local field registration station (FRS) or the nearest MP or SF station. After reporting to the MP or SF station and turning in the license plates, the POV owner must apply for replacement plates through the FRS (basic pub, para 3-16a).

c. Recovered European-style license plates that were previously reported lost or stolen will be returned to the RMV for destruction and will not be reissued. These license plate numbers will not be reused until at least 10 years after the date the loss or theft was reported. Fees paid for lost or stolen license plates will not be refunded when those plates are turned in after the loss or theft was reported to the FRS or RMV.

GLOSSARY

SECTION I
ABBREVIATIONS

>	greater than
≥	greater than or equal to
<	less than
≤	less than or equal to
405th AFSB	405th Army Field Support Brigade
AAFES	Army and Air Force Exchange Service
ADAC	*Allgemeiner Deutscher Automobil Club* (General German Automobile Club)
ADAPT	Alcohol and Drug Abuse Prevention and Treatment [Program]
AE	Army in Europe
AEPUBS	Army in Europe Library & Publishing System
AF	Air Force
AFI	Air Force instruction
AIC	assistant installation coordinator
ANSI	American National Standards Institute
AOR	area of responsibility
APO	Army post office
AR	Army regulation
ARC	Advanced motorcycle riders course
ASAP	Army Substance Abuse Program
ATV	all-terrain vehicle
B17	*Begleitetes Fahren ab 17* (accompanied driving starting at age 17)
BAC	blood-alcohol content
BG	brigadier general
BMD	Base Support Operations Maintenance Division, 405th Army Field Support Brigade
BRC	Basic Rider Course
cc	cubic centimeter
CG	commanding general
CG, USAREUR	Commanding General, United States Army Europe
cm	centimeter
CNE-CNA-C6F	Commander, U.S. Naval Forces Europe/Commander, U.S. Naval Forces Africa/Commander, U.S. Sixth Fleet
CONUS	continental United States
CSF	chief, security forces
DA	Department of the Army
dB(A)	decibel (A-weighting)
DD	Department of Defense
DEKRA	*Deutscher Kraftfahrzeug-Überwachungs-Verein* (Technical Vehicle Inspection Association)
DES	director of emergency services
DOD	Department of Defense
DODI	Department of Defense instruction
DOL	director of logistics
DOT	United States Department of Transportation

DRMR-E	Defense Reutilization and Marketing Region–Europe
DTS	driver testing station
DWI	driving while intoxicated
ECE	[United Nations] Economic Commission for Europe
ECE-R	[United Nations] Economic Commission for Europe regulation
ERC	Experienced Rider Course
ETS	expiration term of service
EU	European Union
FRS	field registration station
ft	foot, feet
g	gram
GCMCA	general court-martial convening authority
GO	general officer
GVM	gross vehicle mass
GVWR	gross vehicle weight rating
HN	host nation
HQ USAFE/A4	Directorate of Logistics, Engineering, and Force Protection, Headquarters, United States Air Forces in Europe/United States Air Forces Africa
HQ USAFE/A4RT	Transportation Division, Directorate of Logistics, Engineering, and Force Protection, Headquarters, United States Air Forces in Europe/United States Air Forces Africa
HQ USAFE/A4S	Security Forces Division, Directorate of Logistics, Engineering, and Force Protection, Headquarters, United States Air Forces in Europe/United States Air Forces Africa
HQ USAREUR	Headquarters, United States Army Europe
ICC	insurance confirmation card
ID	identification
IMCOM	United States Army Installation Management Command
IMCOM-Europe	United States Army Installation Management Command, Europe Region
in	inch
KFB	*Kraftfahrzeugbrief* (vehicle registration certificate)
kg	kilogram
kph	kilometers per hour
kW	kilowatt
L	liter
lb	pound
LLA	legal liaison authority
LN	local national
LPG/CNG	liquefied petroleum gas/converted natural gas
LSG	[United States Air Forces in Europe/United States Air Forces Africa] logistics support group
m	meter
mg	milligram
mL	milliliter
mm	millimeter
MOS	military occupational specialty
MP	military police
mph	miles per hour
MRT	motorcycle refresher training

MSG	[United States Air Forces in Europe/United States Air Forces Africa] mission support group
MSF	Motorcycle Safety Foundation
MSRC	Motorcycle Sport Rider Course
MWR	morale, welfare, and recreation
NAF	nonappropriated fund
NATO	North Atlantic Treaty Organization
O4	major
OF	optional form
OPNAV	Office of the Chief of Naval Operations
PCS	permanent change of station
PM	provost marshal
PMR	power-to-mass ratio
POA	power of attorney
POC	point of contact
POL	petroleum, oils, and lubricants
POV	privately owned vehicle
PPE	personal protective equipment
PS	*Pferdestärke* (horsepower)
RHC-E	Regional Health Command Europe
RMV	[United States Army Europe] Registry of Motor Vehicles
SA	Supplementary Agreement to the North Atlantic Treaty Organization Status of Forces Agreement
SF	[Air Force] security forces
SOFA	Status of Forces Agreement
StVZO	*Straßenverkehrs-Zulassungs-Ordnung* (Road Traffic Licensing Regulation)
TDY	temporary duty
TÜV	*Technischer Überwachungsverein* (Technical Control Association)
UCMJ	Uniform Code of Military Justice
UMC	unit motorcycle coordinator
U.S.	United States
USAFE/AFAFRICA	United States Air Forces in Europe/United States Air Forces Africa
USAG	United States Army garrison
USAREUR	United States Army Europe
USAREUR DCSENGR	Deputy Chief of Staff, Engineer, United States Army Europe
USAREUR PM	Provost Marshal, United States Army Europe
USEUCOM	United States European Command
VERINET	Vehicle Registry Information Network
VIN	vehicle identification number

SECTION II
TERMS

abandoned vehicle
A vehicle that has gone through the procedures in section 2575, Title 10, United States Code (basic pub, app E). Vehicles that have been stationary for an extended period (except vehicles in authorized deployment holding lots) and vehicles missing license plates or other evidence of ownership are vehicles that will become officially “abandoned vehicles.”

accompanied personnel
Sponsors in the command accompanied by Family members (with or without spouse).

appellate authority
An officer in the grade of colonel or above or a civilian supervisor in the grade of GS-15 or above next above the revoking authority in a licensee's chain of command. A civilian appellate authority takes no action relating to military personnel and their Family members. Such cases are referred to the military chain of command.

authorized insurance company
A company licensed and regulated or otherwise authorized by German authorities to sell the mandatory third-party liability insurance in Germany.

***Begleitetes Fahren ab 17 (B17)* driving authorization**
A temporary authorization issued by a competent German drivers-license authority (*Fahrerlaubnisbehörde*) to a person who is at least 17 years old and has completed the regular drivers-license test. This authorization is valid only in Germany. The *B17* driving authorization must list all individuals authorized to accompany the holder of the *B17* driving authorization. Authorized individuals must be at least 30 years old, have had a drivers license for at least 5 years, and be reliable drivers (that is, must not have received more than 3 points under the German drivers-license system).

contractor
An individual who works under contract for the DOD and is entitled to individual logistic support under the NATO Status of Forces Agreement.

country license
A valid drivers license from any sovereign country or any State or territory of the United States.

deployment
The assignment of an individual assigned to a unit in Germany that is participating in an ongoing military mission outside Germany (for example, Afghanistan, Kosovo) for an extended period.

driving privilege
The permission granted to a person to operate a privately owned vehicle in Germany. This privilege is subject to administrative suspension or revocation by appropriate authorities.

emergency vehicle
An ambulance, a motor vehicle belonging to a fire department, or a motor vehicle belonging to a federal, state, or host-nation law-enforcement agency.

eye protection
An eye-protective device that meets Vehicle Equipment Safety Commission Regulation standard 8.

Family member
The lawful spouse, legitimate child, legitimatized child, adopted child, stepchild, or unmarried student up to 23 years old who is attending an accredited institution of higher learning full-time, whose sponsor is a military member or DOD civilian employee.

immediate safety hazard
A mechanical deficiency that could cause harm to the operator or occupants of a vehicle, other traffic users, or the environment.

indecent and obscene matter
Texts or illustrations that describe or depict sexual or excretory activities or organs in terms or in a way that is offensive, as measured by contemporary community standards. Such written or graphic material is obscene if, taken as a whole, the material is intended to arouse interest in sex; is offensive because it affronts contemporary community standards relating to the description or representation of sexual matters; and is completely without redeeming social value.

local national employee
An employee who is employed pursuant to host-nation labor law and the modifications based on Article 56 of the Supplementary Agreement to the NATO Status of Forces Agreement and the *Tarifvertrag vom 16. Dezember 1966 für die Arbeitnehmer bei den Stationierungsstreitkräften im Gebiet der Bundesrepublik Deutschland* (Collective Tariff Agreement II).

motorcycle
A vehicle designed to travel primarily with two wheels in contact with the ground. Included in this category are electric scooters, mokicks, mopeds, motor-powered skateboards, motor scooters, and motorbikes with or without a sidecar attached that are propelled by an engine (fuel or electric) and require the operator to have a class 1, 1a, 1b, 4, or 5 U.S. Forces Certificate of License.

motorcycle helmet
A protective headgear that meets American National Standards Institute standard Z90-1 or Economic Commission for Europe Norm 22-02 for foreign-made helmets.

motor vehicle
A self-propelled, wheeled conveyance that does not run on rails, but is manufactured primarily for use on public roads. Any self-propelled wheeled conveyance capable of exceeding speeds of 25 kilometers per hour (kph) is considered to be a motor vehicle for the purposes of this publication, including electric bicycles, scooters, and Segways that are capable of exceeding 25 kph.

nonmotorized vehicle
Any wheeled conveyance not capable of exceeding 25 kilometers per hour (kph). This includes electric bicycles, scooters, and Segways with a maximum speed of less than 25 kph.

offroad recreational vehicle
An all-terrain vehicle or a motorcycle used primarily for offroad or cross-country sporting events.

operation of a privately owned vehicle
Driving or otherwise being in physical control of a motor vehicle. A person is in physical control when in a position to regulate or restrain a vehicle's operation or movement.

pocket bike
A vehicle that is also known as *pocket rocket* and *mini-moto*. This bike is a tiny, gas-powered motorcycle that can travel up to 55 miles per hour. It is about 2 feet high and 40 inches long and weighs about 40 pounds (lb). It can hold an adult up to 550 lb. Pocket bikes may not be registered or operated on public roads or U.S. installations in Germany unless certified by the manufacturer for operation on public roads.

privately owned vehicle (POV)
A wheeled conveyance owned by a private individual for that individual's personal use, including any class of conveyance used exclusively in racing events. POVs used periodically and primarily for recreation such as motorcycles, trikes, quads, and motor homes are recreational vehicles. Antique and classic vehicles that are at least 30 years old are also considered recreation vehicles.

quad
A vehicle with four wheels, no protective body structure, and designed for onroad and offroad use. These vehicles must be registered as automobiles for use on public highways and roads. They may be registered only after passing a mechanical inspection to ensure that they are in compliance with all standards applicable to regular automobiles.

reinstating authority
An individual who has been granted the right to reestablish previously revoked driving privileges. For other than Navy and Air Force personnel, the authority to reinstate driving privileges that were revoked for driving while intoxicated will be the responsible United States Army garrison (USAG) commander or an individual designated in writing by the USAG commander. For Navy personnel, the authority to reinstate previously revoked driving privileges will be according to Office of the Chief of Naval Operations Instruction 11200.5C. For Air Force personnel, the reinstating authority will be the installation commander or his or her delegee. For a person whose license was revoked for causes other than driving while intoxicated, only the USAFE/AFAFRICA mission support group or logistics support group commander will have the authority to reinstate driving privileges.

restraining device
An appliance designed to hold a person steady in a seat (for example, seatbelt, lap belt, shoulder belt, child-restraining device).

revocation
Withdrawal of driving privileges for a period of up to 5 years.

revoking authority
An officer in the grade of major (O4) or above or a civilian supervisor in the grade of GS-12 or above next above the suspending authority in the chain of command of a licensee. If a commander has designated an O4 or GS-12 as the suspending authority for a unit, organization, or group of people, the commander will be the revoking authority. With the exception of the USAREUR Registrar and the Deputy USAREUR Registrar, a civilian revoking authority will not revoke driving privileges of military personnel or their Family members. Such cases will be referred to the military chain of command. For Air Force personnel, the revoking authority will be the installation commander who may delegate his authority to the logistics support group or mission support group (equivalent) commander or deputy commander.

service of process
The act of issuing a traffic ticket

sponsor
A person entitled to logistic support in the European theater because of assignment to or employment by the U.S. Forces or by a civilian component of the U.S. Forces.

supervisor
A commissioned officer or a civilian employee exercising supervisory responsibilities over military or civilian personnel. This authority may be delegated to a noncommissioned officer.

suspending authority
An officer or civilian in a licensee's chain of command who is immediately senior to the licensee, or an officer in the grade of major (O4) or above (normally the company commander) who has been designated by a commander as the individual who has the right to withdraw driving privileges for a given time for members of a unit or organization. In addition, mission support group and logistics support group commanders and deputy commanders may withdraw driving privileges for Air Force personnel.

suspension
Withdrawal of driving privileges for a specific period from 7 calendar days to 1 year.

trike
A three-wheeled vehicle that uses a motorcycle-type engine or an automobile engine. A motorcycle with sidecar is not a trike. Registration plates for these vehicles will be mounted on the rear of the vehicle. Trikes will be required to pass a mechanical inspection under the same standards as regular automobiles and motorcycles. The only exception will be that a trike does not require seatbelts.

truck
A motor vehicle designed, used, and maintained primarily to transport cargo.

unclaimed privately owned vehicle
A vehicle that has not been properly disposed of and for which the owner can be identified.

U.S. Forces Certificate of License
AE Form 190-1F or AE Form 190-1G that U.S. Forces military and civilian personnel and their Family members must have to drive in Germany. This does not include the operation of Government vehicles, which can be operated using OF 346 or Air Force Form 2293.